Turcon® Roto Variseal®



■ TURCON® ROTARY SEALS - SPRING ENERGIZED

■ Turcon® Roto Variseal®

Description

The Turcon® Roto Variseal® is a single-acting seal consisting of a U-shaped seal jacket and a V-shaped corrosion resistant metal spring.

The characteristic of the Roto Variseal® is the flanged heel, which prevents the seal from rotating by clamping in the groove and the short and heavy dynamic lip offering reduced friction, long service life and a good scraping effect even in highly viscous media.

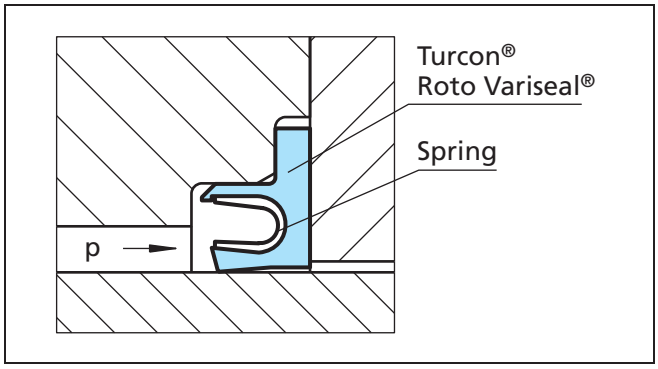

Figure 135 Turcon® Roto Variseal®

At low and zero pressure, the metal spring provides the primary sealing force. As the system pressure increases, the main sealing force is achieved by the system pressure and ensures a tight seal from zero to high pressure.

The possibility of matching suitable materials for the seal and the spring allows use in a wide range of applications going beyond the field of hydraulics, e.g. in the chemical, pharmaceutical and foodstuffs industry.

The Roto Variseal® can be sterilized and is available in a special Hi-Clean version where the spring cavity is filled with a Silicone elastomer preventing contaminants from being entrapped in the seal. This design also works well in applications involving mud, slurries or adhesives to keep grit from packing into the seal cavity and inhibiting the spring action.

Advantages

- Suitable for rotary, reciprocating and static applications
- Protects against mechanical torsion
- Low coefficient of friction
- Remains tight in groove even when subject to oscillating or helical movements
- Withstands rapid changes in temperature
- High abrasion resistance
- Excellent resistance to aging
- Good scraping ability
- Can be sterilized
- Available in Hi-Clean version

Technical data

Operating pressure:	For dynamic loads: 15 MPa For static loads: 25 MPa
Speed:	Rotating: Up to 2 m/s
Temperature:	-100 °C to +260 °C For specific applications at lower temperatures, please enquire
Media compatibility:	Virtually all fluids, chemicals and gases

Important Note:
The above data are maximum values and cannot be used at the same time, e. g. the maximum operating speed depends on material type, pressure and temperature.

Frictional force

Indicative values for frictional force are included in Figure 136. Frictional force is given as a function of sliding speed and operating pressure for a shaft diameter of 50 mm (2 inches) at an oil temperature of 60 °C. The operating limits are lower at higher temperatures.

Indicative values for other shaft diameters can be calculated from the formula:

$$P \simeq P_{50} \times \left(\frac{d}{50\ mm}\right) [W]$$

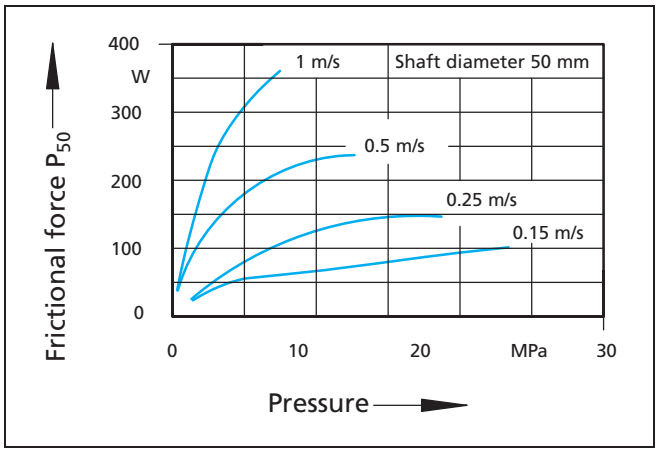

Figure 136 Frictional power for Turcon® Roto Variseal®

The indicative values apply for constant operating conditions. Changes in these, such as pressure fluctuations or direction of rotation can result in significantly higher frictional values.

Application examples

The Turcon® Roto Variseal® is used as a single acting rotary seal in sectors such as:

- Rotary injection units (injection molding machines)
- Rotary distributors
- Pivoting motors in pharmacy, industry, machine tools, foodstuff and chemical

Application limits

The maximum operating limits for temperature, pressure and speed are dependent upon one another and therefore cannot all apply at the same time.

The lubrication properties of the media to be sealed and heat dissipation must also be taken into consideration.

The following pv values can be used as general guidelines:

Poor lubrication up to pv	= 2 MPa x m/s
Good lubrication up to pv	= 5 MPa x m/s
Very good cooling up to pv	= 8 MPa x m/s

These values are lower for diameters < 50 mm (2 inches). Tests of these characteristics are recommended to establish application limits.

Materials

All materials used are physiologically safe. They contain no odour or taste-affecting substances.
The following standard material combination has proved effective for most applications:

Seal ring:	Turcon® T40
Spring:	Stainless Steel Material No. AISI 301

For use in accordance with the demands of the “Food and Drug Administration“, suitable materials are available on request.

Lead-in chamfers

In order to avoid damage during installation, lead-in chamfers and rounded edges must be provided on the housing and on the rod (Figure 137). If this is not possible for design reasons, a separate installation tool is recommended.

The minimum length of the lead-in chamfer depends on the profile size of the seal and can be seen from the following tables. If concentricity between the parts is not ensured during installation the lead-in chamfers must be increased correspondingly.

For the surface quality of the lead-in chamfer, the same recommendations apply as given for the sealing surfaces in Table XC.

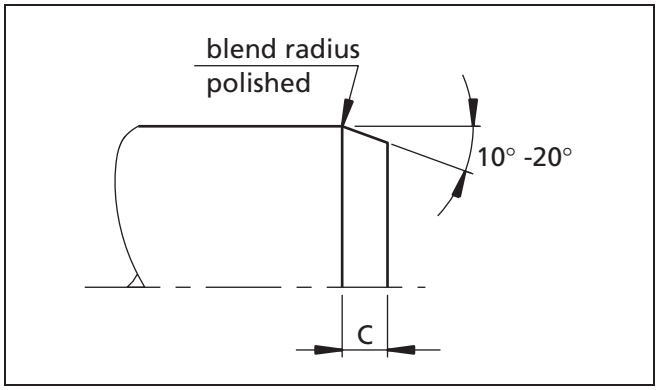

Figure 137 Lead-in chamfer on shaft

Table LXXXVIII Lead-in chamfers for Turcon® Roto Variseal®

Series	Lead-in Chamfers Length C min.
TVM1	4.5
TVM2	5.0
TVM3	8.0
TVM4	12.0

Mating surface materials

Sealing of applications with rotating movements require very good mating surfaces. A minimum hardness 55 HRC is recommended to a harding depth of at least 0.3 mm.

Particular attention must be paid to coated surfaces and good heat dissipation through the coating is required.

Shaft bearing/Radial clearance for bearing

In general the sealing elements should not take on any bearing tasks as this will reduce the functioning of the seals. Consequently we recommend to guide the components by means of a roller or slide bearing.

■ Installation of Turcon® Roto Variseal®

Installation instructions

The following points should be observed before installation of the seals:

- Check whether housing or rod has a lead-in chamfer; if not, use an installation sleeve
- Deburr and chamfer or round sharp edges, cover the tips of any screw threads
- Remove machining residues such as chips, dirt and other foreign particles and carefully clean all parts
- If the seals are installed with grease or oil, attention must be paid to the compatibility of the seal materials with these lubricants. Use only grease without solid additives (e.g. molybdenum disulfide or zinc sulfide)
- Do not use installation tools with sharp edges

Installation of Turcon® Roto Variseal®

Turcon® Roto Variseal® is installed in split grooves.

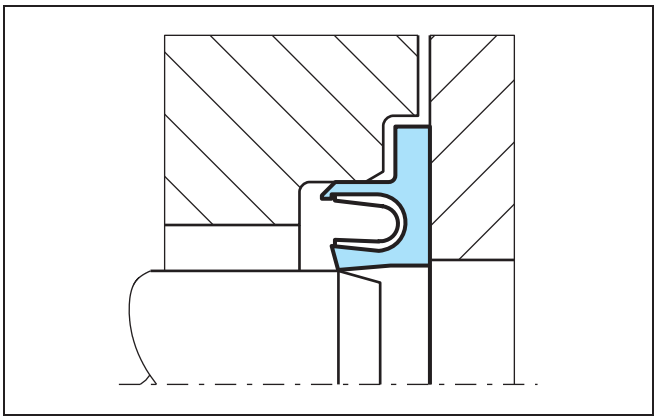

Figure 138 Turcon® Roto Variseal®

Installation should be performed in the following steps in order to ensure a concentric and strain-free fit:

- Place the seal ring in into the open groove
- Fit the cover loosely onto the housing
- Insert the shaft
- Tighten the cover

Table LXXXIX Standard Turcon® materials for Roto Variseal®

Material, Applications, Properties	Code	Spring material	Code	Operating temp. °C	Mating surface material	MPa max.
Turcon® T40 For all lubricating and non-lubricating hydraulic fluids, water hydraulics, soft mating surfaces Carbon fiber filled Color: Grey	T40	Spring material AISI 301	S	-100 to +260	Steel Steel, chrome plated Cast iron Stainless steel, Aluminum Bronze Alloys	15
Turcon® T78 For all lubricated and non-lubricated applications, soft mating surfaces. Aromatic polymer Color: Tan to dark brown	T78	Spring material AISI 301	S	-100 to +260	Steel Steel, chrome plated Cast iron Stainless steel	5

Highlighted materials are standard.

Trelleborg Sealing Solutions recommends that the following surface finishes be observed:

Table XC Surface roughness

Recommended maximum surface roughness µm		
Media	**Shaft surface[1)]**	**Static groove surface**
Cryogenic and low molecular gases Hydrogen, Helium, Freon, Oxygen Nitrogen	R_{max} = 1.0 µm R_z = 0.63 µm R_a = 0.1 µm	R_{max} = 3.5 µm R_z = 2.2 µm R_a = 0.3 µm
Low viscosity fluids Water, Alcohols, Hydrazine, Gaseous nitrogen, Natural gas, Skydrol, air	R_{max} = 2.5 µm R_z = 1.6 µm R_a = 0.2 µm	R_{max} = 5.0 µm R_z = 3.5 µm R_a = 0.6 µm
High viscosity fluids Hydraulic oils, Crude oil, Gear oil, Sealants, Glue, Milk products	R_{max} = 2.5 µm R_z = 1.6 µm R_a = 0.2 µm	R_{max} = 6.5 µm R_z = 5.0 µm R_a = 0.8 µm

[1)] The sealing surface must be free from spiral grooves.
The material contact area R_{mr} should be approx. 50 to 70%, determined at a cut depth c = 0.25 x R_z, relative to a reference line of C_{ref}. 5%.

■ Installation recommendation

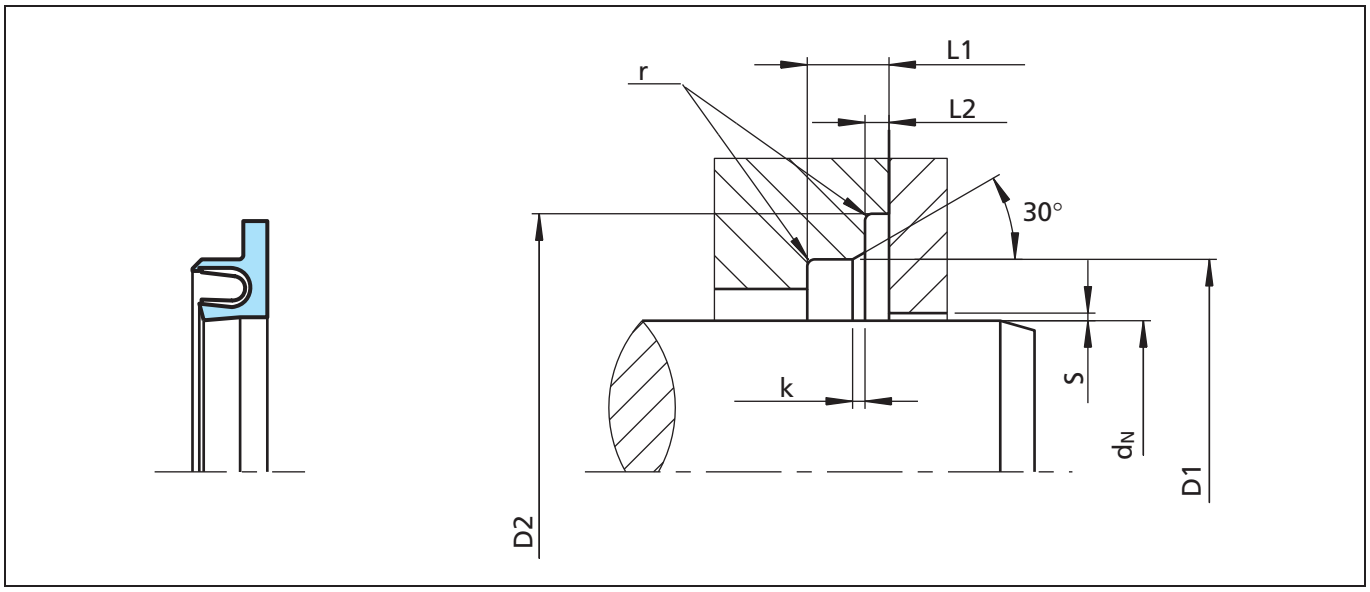

Figure 139 Installation drawing

Table XCI Installation dimensions

Series no.	Rod diameter		Groove diameter		Groove width		Lead-in chamfer	Radius	Radial clearance S max.		
	Standard range d_N f8/h9	Available[1] range d_N f8/h9	D_1 H9	D_2 H10	L_1 min	L_2	k	r	< 2 MPa	< 10 MPa	< 20 MPa
TVM1	5.0 - 19.9	20.0 - 200.0	d + 5.0	d + 9.0	3.6	$0.85\ ^{+0}\ /\ ^{-0.1}$	0.8	0.3	0.25	0.15	0.10
TVM2	20.0 - 39.9	10.0 - 400.0	d + 7.0	d + 12.5	4.8	$1.35\ ^{+0}\ /\ ^{-0.15}$	1.1	0.4	0.35	0.20	0.15
TVM3	40.0 - 399.9	20.0 - 700.0	d + 10.5	d + 17.5	7.1	$1.80\ ^{+0}\ /\ ^{-0.20}$	1.4	0.5	0.50	0.25	0.20
TCM4	400.0 - 999.9	35.0 - 999.9	d + 14.0	d + 22.0	9.5	$2.80\ ^{+0}\ /\ ^{-0.20}$	1.6	0.5	0.60	0.30	0.25

[1] Available on request. Application of a seal series outside of the standard range can impair seal performance and stability and should only be made after careful testing and evaluation.

Ordering example

Turcon® Roto Variseal®, series TVM3 (from Table XCI).

Rod diameter: d_N = 80.0 mm
TSS Part No.: TVM300800 (from Table XCII)

Select the material from Table LXXXIX. The corresponding code numbers are appended to the TSS Part No. (from Table XCII). Together they form the TSS Article No. For all intermediate sizes not shown in Table XCI, the TSS Article No. can be determined from the example opposite.

* For diameters ≥ 1000.0 mm multiply only by factor 1.
Example: TVM4 for diameter 1200.0 mm.
TSS Article No.: TVM4**X1200** - T40S.

** Roto Variseal® are available with the spring groove filled with high temperature silicone. The silicone prevents entrapment of biological contaminants in the seal making the seal easier to clean.

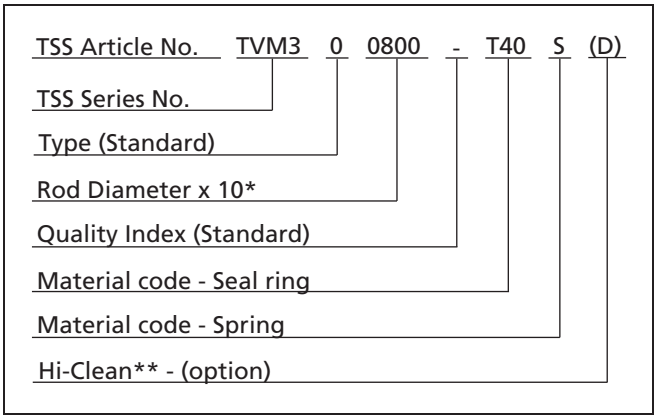

Table XCII Preferred dimension / TSS Part No.

Rod diameter	Groove diameter		Groove width	TSS Part No.
d_N f8/h9	D_1 H9	D_2 H10	L_1	
5.0	**10.0**	**14.0**	**3.6**	**TVM100050**
6.0	**11.0**	**15.0**	**3.6**	**TVM100060**
8.0	**13.0**	**17.0**	**3.6**	**TVM100080**
10.0	**15.0**	**19.0**	**3.6**	**TVM100100**
12.0	**17.0**	**21.0**	**3.6**	**TVM100120**
14.0	**19.0**	**23.0**	**3.6**	**TVM100140**
15.0	20.0	24.0	3.6	TVM100150
16.0	**21.0**	**25.0**	**3.6**	**TVM100160**
18.0	**23.0**	**27.0**	**3.6**	**TVM100180**
20.0	**27.0**	**32.5**	**4.8**	**TVM200200**
22.0	**29.0**	**34.5**	**4.8**	**TVM200220**
25.0	**32.0**	**37.5**	**4.8**	**TVM200250**
28.0	**35.0**	**40.5**	**4.8**	**TVM200280**
30.0	37.0	42.5	4.8	TVM200300
32.0	**39.0**	**44.5**	**4.8**	**TVM200320**
35.0	42.0	47.5	4.8	TVM200350
36.0	**43.0**	**48.5**	**4.8**	**TVM200360**
40.0	**50.5**	**57.5**	**7.1**	**TVM300400**
42.0	52.5	59.5	7.1	TVM300420
45.0	**55.5**	**62.5**	**7.1**	**TVM300450**
48.0	58.5	65.5	7.1	TVM300480
50.0	**60.5**	**67.5**	**7.1**	**TVM300500**
52.0	62.5	69.5	7.1	TVM300520
55.0	65.5	72.5	7.1	TVM300550

Rod diameter	Groove diameter		Groove width	TSS Part No.
d_N f8/h9	D_1 H9	D_2 H10	L_1	
56.0	**66.5**	**73.5**	**7.1**	**TVM300560**
60.0	70.5	77.5	7.1	TVM300600
63.0	**73.5**	**80.5**	**7.1**	**TVM300630**
65.0	75.5	82.5	7.1	TVM300650
70.0	**80.5**	**87.5**	**7.1**	**TVM300700**
75.0	85.5	92.5	7.1	TVM300750
80.0	**90.5**	**97.5**	**7.1**	**TVM300800**
85.0	95.5	102.5	7.1	TVM300850
90.0	**100.5**	**107.5**	**7.1**	**TVM300900**
95.0	105.5	112.5	7.1	TVM300950
100.0	**110.5**	**117.5**	**7.1**	**TVM301000**
105.0	115.5	122.5	7.1	TVM301050
110.0	**120.5**	**127.5**	**7.1**	**TVM301100**
115.0	125.5	132.5	7.1	TVM301150
120.0	130.5	137.5	7.1	TVM301200
125.0	**135.5**	**142.5**	**7.1**	**TVM301250**
130.0	140.5	147.5	7.1	TVM301300
135.0	145.5	152.5	7.1	TVM301350
140.0	**150.5**	**157.5**	**7.1**	**TVM301400**
150.0	160.5	167.5	7.1	TVM301500
160.0	**170.5**	**177.5**	**7.1**	**TVM301600**
170.0	180.5	187.5	7.1	TVM301700
180.0	**190.5**	**197.5**	**7.1**	**TVM301800**
190.0	200.5	207.5	7.1	TVM301900

Rod diameter	Groove diameter		Groove width	TSS Part No.
d_N f8/h9	D_1 H9	D_2 H10	L_1	
200.0	**210.5**	**217.5**	**7.1**	**TVM302000**
210.0	220.5	227.5	7.1	TVM302100
220.0	**230.5**	**237.5**	**7.1**	**TVM302200**
230.0	240.5	247.5	7.1	TVM302300
240.0	250.5	257.5	7.1	TVM302400
250.0	**260.5**	**267.5**	**7.1**	**TVM302500**
280.0	**290.5**	**297.5**	**7.1**	**TVM302800**
300.0	310.5	317.5	7.1	TVM303000
320.0	**330.5**	**337.5**	**7.1**	**TVM303200**
350.0	360.5	367.5	7.1	TVM303500
360.0	**370.5**	**377.5**	**7.1**	**TVM303600**
420.0	434.0	442.0	9.5	TVM404200
450.0	464.0	472.0	9.5	TVM404500
480.0	494.0	502.0	9.5	TVM404800
500.0	514.0	522.0	9.5	TVM405000
600.0	614.0	622.0	9.5	TVM406000
700.0	714.0	722.0	9.5	TVM407000

The rod diameters printed in **bold** type conform to the recommendations of ISO 3320.

Other dimensions and all intermediate sizes up to 2500 mm diameter including inch sizes can be supplied.