Hoonga

Packaging Systems

Since 1970, Hoonga has been persistent in its efforts to supply packaging systems in global markets, keeping up with fast changing trends and customers' needs.
Continuous development and creative thinking enable Hoonga to provide innovative solutions and applications for automatic packaging systems.

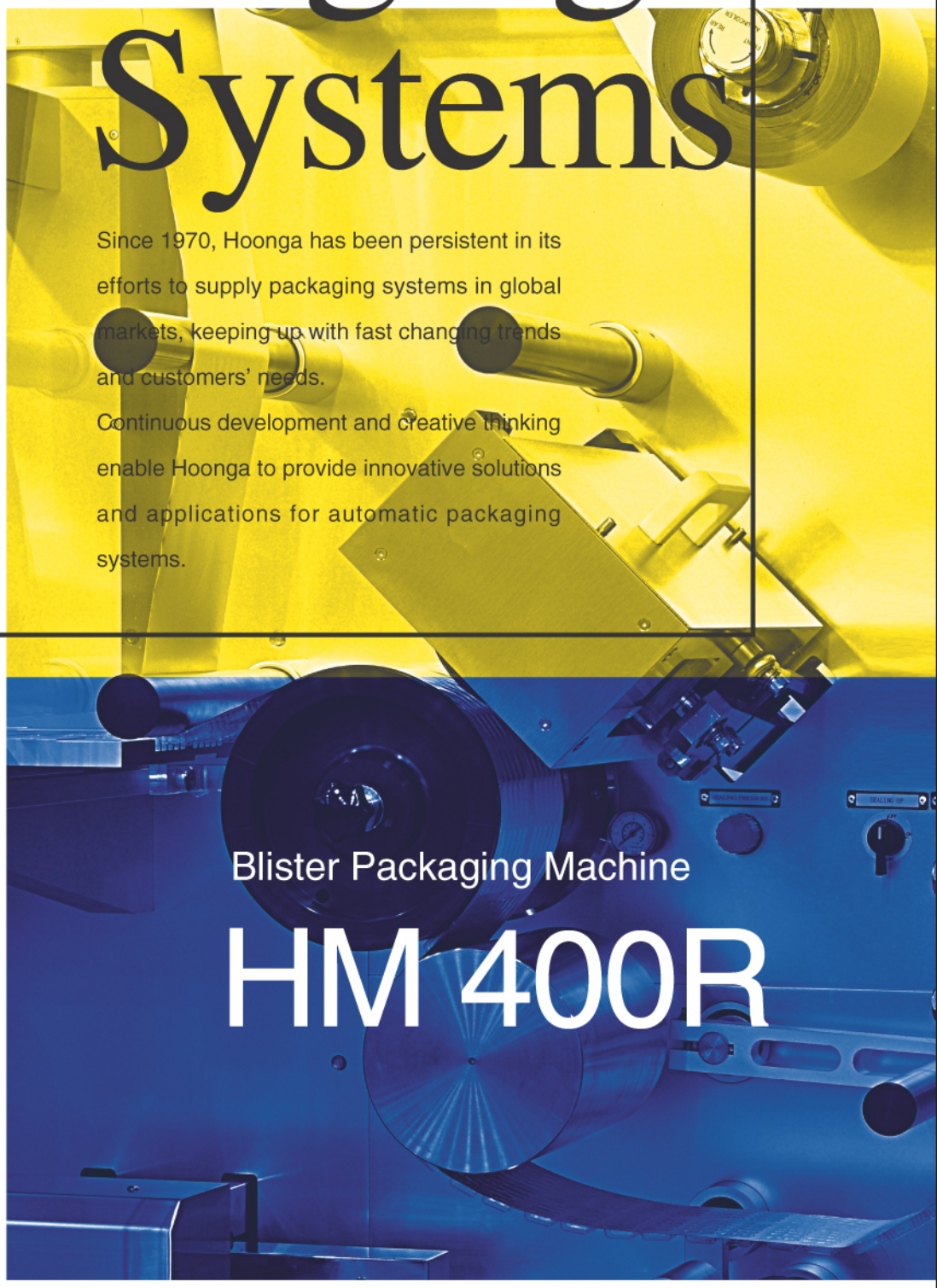

Blister Packaging Machine

HM 400R

HM 400R

HM 400R is capable of outputting at maximum of 400 blisters per minute even within a confined space. It boosts operation speed of 200 cycles per minute for punching with dual lane architecture and trouble-free driving mechanism permits exceptional productivity.

Industry Standard PC Control System

Innovative production management and operations are made possible by incorporating an industry standard PC control system with a color LCD touch screen. Controlled access to the machine is provided by assigning user accounts in order to heighten the security level involved with production. Audit trails allow supervisors to monitor the status of the machine and production by inspecting chronological operation records. The system is also capable of providing self diagnosis and detailed trouble shooting reports. The fastest format changeover is enabled through simple mechanical tool changes followed by selecting preset parameters of a specific format on the control system. Servo drives and the PC control system fully automate the operation and provide accommodating environment for inexperienced operators. The entire operation manual is stored in the PC control system for the operator's convenience.

Self-Adjusting Indexing

Indexing of three different indexing zones including slow indexing of the forming zone, continuous indexing of the feeding & sealing zone and fast indexing of the perforation, emboss coding & punching zone, can be individually self adjusted by associated servo drives.

Easy and Fast Format Mold Changeover

Self-adjusting indexing with servo drives and the tool-less changeover design for mold sets contribute to easy and fast format mold changeovers in approx. 20 - 30 minutes.

Compact Footprint

Unlike HM 400R's high output, it only occupies the minimum space in a clean room. Ergonomic design of this compact machine allows easy access to electrical and mechanical driving sections.

GMP Compliant Design

Balcony construction with the slope bottom, clean and simple composition of stations and frameless safety doors allow easy and fast cleaning which minimize dust accumulation.

Material Flexibility

HM 400R handles most of blister packaging materials including poly propylene (PP). All conventional thermoforming materials such as PVC, PVC/PVDC, PVC/ACLAR and COC along with aluminum for cold forming are widely used for production.

Feeding Zone

Separation of the feeding zone from the production and driving zone minimizes cross contamination and eliminates any vaper.



Continuous Sealing

A rotary sealing mechanism with continuous motion contributes to fast and easy product feeding by application of simpler and lower cost feeding system compare to the intermittent motion system for high output.

Fast Driving Zone

Perforation, emboss coding and punching stations with downing are driven as a single operational unit. Its design occupies less space with smaller format molds. This fast driving zone operates at the maximum of 200 cycles per minute.

Convenient Integration to Downstream

A discharging direction can be assigned either straight out of the machine or to the front side for flexibility and convenient integration to the downstream cartoner. Such a compact alignment system creates the shortest blister and cartoner line-up.

Options Available on HM 400R:

- Various feeding systems applicable as per different products, packaging materials, etc.
- Product feeding elevator from floor level.
- Chamber of feeding zone for closed air control against over and under pressure.
- Vacuum devices for dust in feeding zone.
- Visual inspection system to detect blister pockets which are empty or filled with irregular shaped products.
- Pinhole detection system for aluminum cold forming material.
- Print registration control system for lid material.
- In-line printer either flexographic or laser printer.
- Coding by ink-jet, laser-jet, etc.
- Bar code reading printed on lid foil.
- Printer connection to integrated PC control system.
- Modem connection to integrated PC control system for remote operation management.
- In-line facilities for downstream automations.





1 2
3 4

1. Forming Station

Either thermoforming and/or cold forming can be implemented at Forming Station. Thermoforming is performed by means of air blowing on a heated film and such process allows material flexibility which includes polypropylene (PP) with a special forming mold. Cold forming is carried out by the plug assist mechanism.

2. 3. Self-adjusting Indexing System

A position of the film is read and corrected at each index step by servo motor drive technology. The forming zone has individual servo-driven grips which assist the indexing system. Emboss Coding, Perforation and Punching Stations form a fast driving zone that is operated by servo-driven rotary indexing systems.

4. Discharge

Sorting process for inferior products and empty packs is available by camera vision system and optical sensor. (Front side discharge)

5. Feeding Section

A continuous motion product feeding mechanism enables swift feeding speed for general products. A drum or special feeding system can also be installed for Alu / Alu packaging and special products.

6. Continuous Motion Sealing

Continuous motion sealing with rotary indexing and cooling drum contributes to fast product feeding speed.

7. Product Inspector

A camera vision system can be installed following the product feeding zone.

8. Print Registration Control System

This device controls stretching force of lid foil regularly to match the printing information on the pack by examining eyemark positions.



5 6
7 8



Fitting inconstant production schedule,
Highly effective productivity,
Absolute production management,
Simplest operation required,
Conformity to advanced GMP directive
On compact floor space.

ISO 9001: 2000 / ISO 14001

CE



Featuring HM 400R lined up with intermittent motion horizontal cartoning machine, HANA 120.

TECHNICAL DATA

HM 400R

Output	max. 400 blisters/min. in dual lanes	
Operation speed	Thermo forming	min. 15 ~ max. 60 cycles/min
	Cold forming	min. 15 ~ max. 50 cycles/min
	Punching	min. 50 ~ max. 200 cycles/min
Forming format range	Width	min. 60 ~ max. 250 mm
	Index	min. 30 ~ max. 200 mm
	Depth	max. 12 mm (Alu/Alu : max. 8 mm)
Punching format range	Width	min. 60 ~ max. 240 mm
	Index	min. 30 ~ max. 100 mm
Packaging material	Forming material	PVC, PVC/PVDC, PVC/ACLAR, COC, PET, PP, Alu forming material, etc.
	Lidding material	Alu-hard / soft, Child Resistant Lid Foil, etc.
Utilities	Electric power connection	380V, 3-phase, 50/60Hz (other voltages avatlable on reguest)
	Electric connection	16 KVA
	Compressed air pressure	6 bar in 10% fluctuation
	Air consumption	200 NL/min

Machine dimensions

Length	approx. 3,060 mm
Width	approx. 1,330 mm
Height	approx. 1,870 mm
Weight	approx. 2,500 Kgs

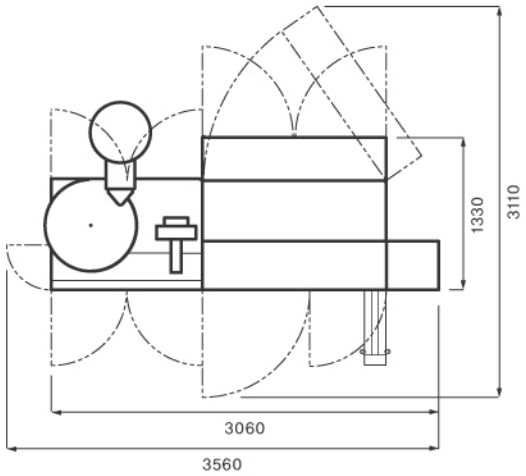

Contents on this catalogue are to assist understanding of the machine only and are subject to technical modifications without prior notice. The final specification is as per our quotation offered to you exclusively.

March / 2009

Hoonga

Hoong-A Corporation

Head office / Factory 83-6, Dodang-Dong, Wonmi-Gu, Bucheon, Gyeonggi, Korea (420-803)
Tel. 82-32-675-1511 Fax. 82-32-675-9200
Hoong-A America 14111 Freeway Drive, Suite 300, Santa Fe Springs, California 90670, U.S.A.
Tel. 1-562-407-9317 Fax. 1-562-407-9327
E - mail sales@hoonga.com
Home page **www.hoonga.com**