For Aluminum Packaged Products

Maximum pass width: 230 mm (KD8200AW), 400 mm (KD8220AW)

KD8200AW

Pass height: 30 mm, 40 mm, 50 mm, 60 mm

KD8220AW

Pass height: 30 mm, 40 mm, 50 mm, 60 mm

Note: Metals that exhibit magnetic properties such as iron and SUS430 and stainless steel processed by cutting and bending (placed under stress) such as SUS304 and SUS316 can be detected.
Aluminum, brass, copper, silver, gold, lead, titanium, etc. cannot be detected because they cannot be magnetized.

⚠ This metal detector (MD) uses strong magnets so people with pacemakers, etc.,(life-support devices) must not come near it, otherwise there is a risk of pacemaker malfunction.



KD8200AW

External Dimensions

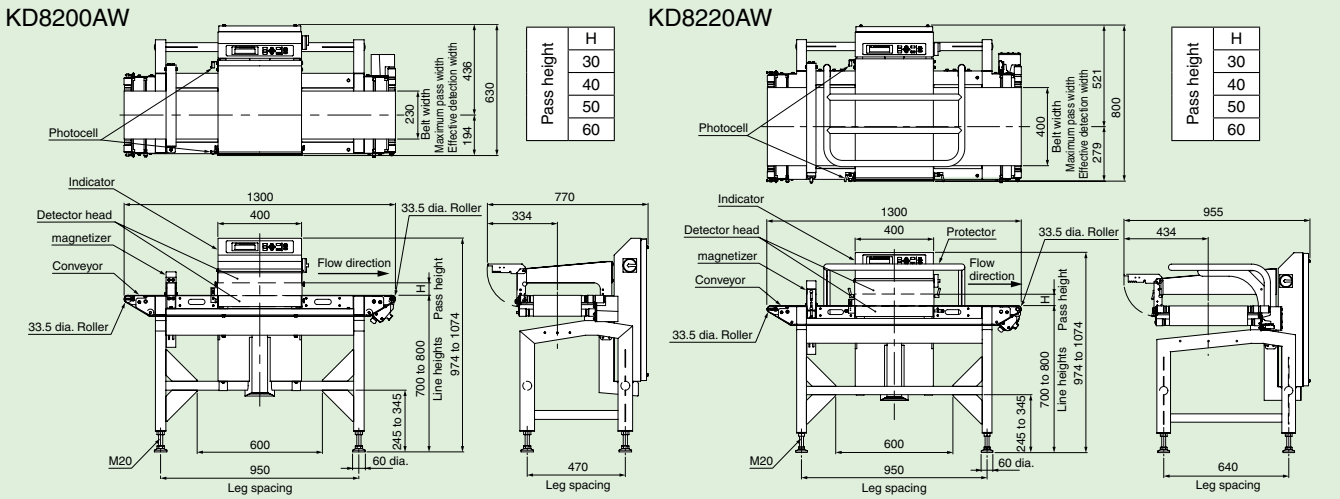

Units: mm

Specifications

Model	KD8200AW	KD8220AW
Pass height [1]	30 mm, 40 mm, 50 mm, 60 mm	
Maximum pass width	230 mm	400 mm
Belt width	230 mm	400 mm
Display	STN LCD	
Operation method	Flat panel key	
Preset memory	Maximum 100	
Product packaging	General, aluminum-evaporated-packaging and aluminum-foil-packaging products	
Belt speed [2]	10 to 90 m/min (variable speed depending on Product No.)	10 to 40 m/min (variable speed depending on Product No.)
Maximum product weight [2, 3]	70 m/min or less : 4 kg, 71 m/min or more : 3 kg	5 kg
Metal detection	Rejection signal output and beep, or belt stop and beep	
Power requirements	100 to 120 Vac +10% –15% or 200 to 240 Vac +10% –15%, single phase, 50/60 Hz, 200 VA, rush current 70 A (typ.) (20 ms or less)	
Mass	130 kg	160 kg
Environmental conditions	0 to 40°C, relative humidity 30 to 85%, non-condensing	
Protection class	IP66 compliance	
Exterior	Stainless steel (SUS304)	

1: Specify one of these pass heights for use when ordering. Contact our sales representatives for change.
2: KD8200AW can support up to 8 kg as an option. However, the belt speed is 5 to 43 m/min.
KD8220AW can support up to 10 kg as an option. However, the belt speed is 5 to 20 m/min.
3: Sum total of product weight on the conveyor.
Note: The shape and size (length, width and height) of products to can be inspected depend on the rejector type.
Note: The noise level of the metal detectors does not exceed 70 dB (A).