GemCore for POS terminals

The Most Integrated Solution for EMV & multi-SAM Architectures !



Overview

Core POS is the ultimate step for mono or multiple smart card reader architectures.
Thanks to Gemplus know-how in silicon conception and to 15 years of experience in development of readers, the GemCore technology now reaches the highest level of integration.
Core POS is a **single chip product** dedicated to applications requiring quick time-to-market, performances, EMVCo Type Approval and/or multiple SAM (Security Access Module) monitoring.

Main advantages and benefits

- Up to 5 card interfaces capability
- Smart card transfer rate: up to 500 Kbds (main card)
- Compatible with microprocessor and memory cards, EMV and non-EMV cards
- Both USB and serial links available for the host interface
- EMVCo/EMV2000 4.1 compliant
- Short time-to-market thanks to efficient development tools and easy certification

Applications

Whether EMVCo is mandatory for your application or not, the Core POS is recommended for any systems needing to interface with smart cards and which is requiring relatively small footprint, quick time to market and optionally up to 4 SAMs interfaces. Typical applications are payment, security and identity.

Compliance with standards

- **ISO/IEC 7816-1, 2, 3, 4:** Integrated circuit cards with contacts
- **EMV Level 1:** EMV2000 specifications version 4.1
- **CB:** Cartes Bancaires (France)
- **RoHS**
- **Other compliances:** ZKA, Mondex, Proton: please contact Gemplus.

Technical features

The product is a single chip solution.
The TQFP64 package version interfaces 1 smart card (EMV approved) and up to 4 SAMs.
The SO24 package version interfaces 1 smart card (EMV approved) and 1 SAM.

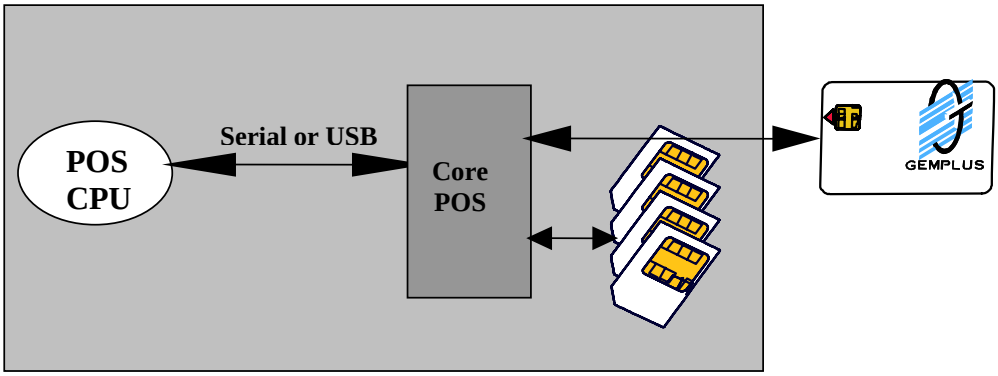

POS Terminal

Supported smart cards	Asynchronous	• Microprocessor cards • T=0, T=1 protocols • Transmission rate: 2 Kbps to 500 Kbps for CK=4MHz
	Synchronous	• Through the Command Interpreter
Smart card electrical interface	Smart card power supply	• 5V/55mA and 3V/50mA and 1.8V/20mA • Short circuit current limitation • Power up / power down control sequences
	Smart card management	• Card insertion/extraction detection
	ESD protection on card I/O	• 4 KV Human Body Model
SAM electrical interface	Asynchronous	• Microprocessor SAMs • 125 Kbps for CK=4MHz
	SAM power supply	• 5V, 55 mA
GemCore chip power supply	Voltage	• 4.6 V to 5.4 V
	Power down	• Less than 500 µA power down current
Serial host interface	Serial asynchronous link	• Transmission rate: 9.6 Kbps to 115 Kbps • Format: 8 bits, no parity • Auto baud rate
	Communication protocol	• CCID V1.0 on serial TTL link
USB host interface	USB 2.0 compliant	• CCID V1.0 • Full speed 12Mbps, hubless
Other features	Temperature range	• Operating range: 0°C to +70°C • Storage: -65°C to +150°C
	Packaging	• SO24: sticks of 32 units in box of 25 sticks • TQFP64: trays of 90 units in box of 6 trays
	Environmental	• RoHS compliant