INNOBIZ
기술혁신형 중소기업
품질, 환경 경영시스템 인증 기업
ISO 9001/2008 ISO 14001/2004
연구개발전담부서

E-MAG Type
(Electromagnetic Flowmeter)



전자식 유량계

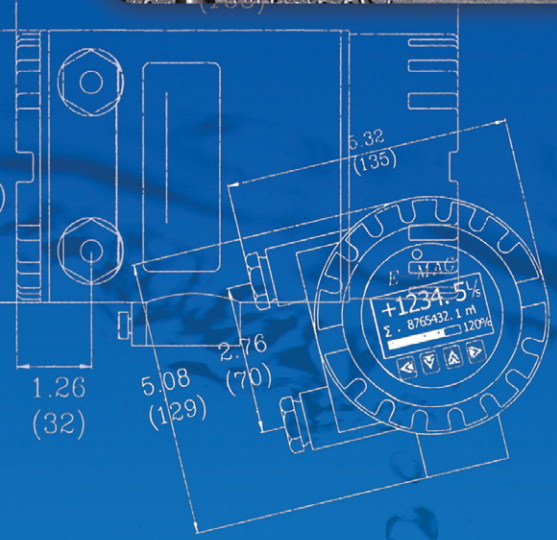

- 구동부가 없어 내구성이 뛰어나다.
  (슬러리등 고형물 혼합유체에 적합하다)
- 일체형, 분리형으로 현장 조건에 따라 선택이 가능하다.
- 전류/펄스 출력이 기본이므로 외부기기와 호환이 가능하며 공장자동화 시스템에 적합하다.
- 단, 전도도(전기가 흐르는 성질)가 5≥㎲이어야 한다.
- 현장의 유체에 따라 Lining/Electrode등 다양한 재질의 선택이 가능하다.
- 주요사용처
  상 · 하수도 처리시설, 약품 공장, 콘크리트 공장, 제지 공장 등 다양한 산업 플랜트 현장에 적용이 가능하다.

AUTO F·L·O·W
유량계 전문제작/판매
(株) 오토후로

Electromagnetic Flowmeter (10 to 1000mm)

▶ Summary

E-mag electromagnetic flowmeter is made with international latest technology for electromagnetic flowmeter, used to measure the volumetic flow of the conductive liquid and slurry in the closed pipes.
The new exciting mode has been adopted on the SMART transmitter of E-mag electromagnetic flowmeter with low power consumption, stable zero and high accuracy. The 16 digits high-efficient microprocessor has been used on the transmitter, optional 2×16 digits display, convenient to set the parameters locally, reliable in programing. It has self-monitoring and diagnostic functions. There are threee totalizers in the bi-dirctional measuring system : Forward flow, reverse flow and net flow, forward reverse flow and various output(4-20mA, Opencollector pulse, RS485); ensure the compatibility of the system. Sensor with neoprene and polyurethane lining is intrinsically submersible structure.



E-MAG-Ⅰ (Combined Type)

▶ Measuring Principle

The measuring principle of electromagnetic flowmeter is based on the electromagnetic induction law of Farady. The sensor is mainly composed of measuring tube with isolate lining, a pair of electrodes installed by penetration of the measuring tube wall, a pair of coils and iron core to produce working magnetic field. When the conductive fluid flows through the measuring tube of the sensor, the voltage signal in direct proportion to the average flow velocity of the fluid will be inducted on the electrodes. The signal is amplificatively treated by the transmitter to realize various display functions.



E-MAG-R (Separate Type)

▶ Product Classification

Electromagnetic flowmeter is composed of sensor and transmitter. The two parts can be respectively formed in integral and remote model of flowmeters.
Of them, the instrument with ex-proof function can be used in the specified ex-proof field. The sensor is connected with flange, with 7 kinds of electordes and 5 kinds of lining to be chosen. The transmitter has : process and slurry : push-button and magnetic-key ; with display and without display. Because the process, pushbutton transmitter is convenient for programming and setting the parameters, we suggest to give priority to select it

▶ Specifications

① Measurement range in terms of flow velocity
0~0.3m/s to 0.3~10m/s, 0~0.1m/s to 0~0.3m/s
range is available optionally
② Accuracy : ±0.5% of the reading (Flow velocity ≥ 1m/s)
③ Fluid conductivity : 5μs/cm minimum
④ Fluid temperature
4-1 Polyurethane lining : -20 to +60℃
4-2 PTFE lining : -20 to +100℃
⑤ Ambient temperature : -20 to +60℃
⑥ Structure : NEMA 4 (IP65) Wateright (standard)
IP68 Wateright (option)
⑦ Standard hazardous locations certifications : Exd[ia]ia II CT5

▶ Model : E-MAG-I/R (Combined/Separate type)

- Mounting style : Flange connection type
- Fluid pressure : 0 to 1Mpa(to be within the applicable flange 1 imitation)
- Connection flange stadards : JIS 10K, ANSI 150#, JIS 20K, DIN PN10....
- Principal materials : case-carbon steel
- Flange material - SUS304 : 10mm to 65mm
  - Carbon steel : 80mm to 1000mm
- Linings
  - PFA(Teflon) for meter size 10 to 250mm standard.
  - Polyurethane for meter size 300 to 1000mm
  - Neoplen for meter size 300 to 1000mm
- Measuring tube material : SUS304
- Electrodes : SUS316 stadard (Hastelloy C, titanium, platinum/iridium, tantalum, etc...)
- Coating : phthalic acid resion coating
- Dimension : see figure
- Cable connection part : 3/4-14NPT made screws are required

▶ E-MAG-I and E-MAG-R converters

① Power supply : 110 to 220VAC, 50/60Hz (stadard)
24Vdc (18~36Vdc)
Battery
② Output signals
- Current output : 4-20mA DC (load resistance 0 to 1000 ohm load)
- Digital output : one point (stadard), transistor open collector
  output capacity : 30Vdc, 200mA maximum
- Pulse rate : 3.6 to 3,600,000 pulse/hr

③ Communications output - RS 485 output
④ LCD display :
full dot- matrix 50×25 dot LCD display (back-light provided)
⑤ Parameter settings
- Zero adjustment : zero point adjustment can be standed by pressing the switch in the converter
- Turn-on time : 30 minutes to rated accuracy power up : 5 seconds from power interruption

– Start–up time : 0.5 seconds from zero flow
– Low flow cut off : adjustable between 0.0 and 9.9% Qmax, below selected valve, output is driven to the zero flow rate signal level.
– Damping : adjustable between 0.1 and 99 seconds
⑥ Case : aluminum alloy (equivalent of IP65)
⑦ Vibration resistance
10 to 150Hz with acceleration of 9.8m/s^2
No defect in putting vibration to each direction of 30Hz with 29.4m/s^2 in 4h
⑧ Dimension and weights : see figure

▶ Dimensions (combined type)

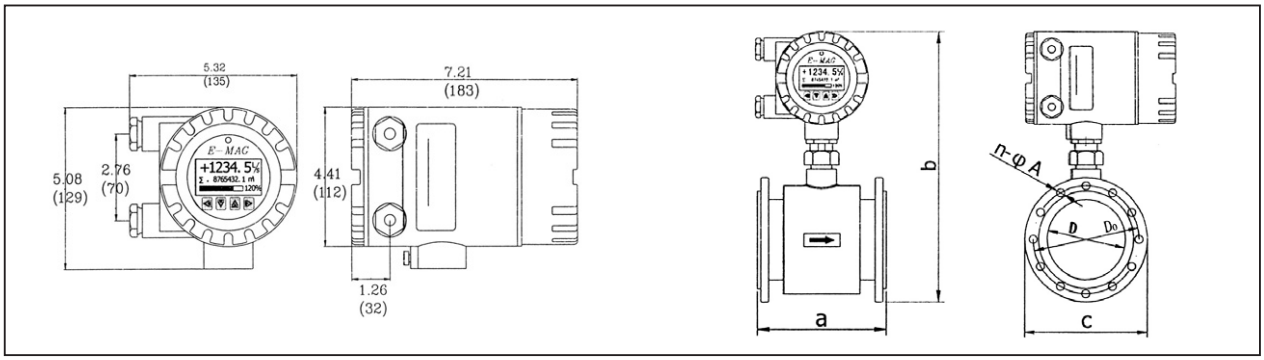

Size (mm)	Pressure Limits(Mpa)	Outline size(mm)			Flange size (mm)			Weight(kg)
		a	b	c	D	D_0	N×A	Approx.
10	4.0	160	300	90	10	65	4×15	5.6
15	4.0	160	300	95	15	70	4×15	6
20	4.0	200	310	100	20	75	4×15	7.5
25	4.0	200	320	125	25	90	4×19	9
32	4.0	200	320	135	32	100	4×19	10
40	4.0	200	320	140	40	105	4×19	11
50	4.0	200	330	155	50	120	4×19	13
65	4.0	200	340	175	65	140	8×19	16
80	4.0	200	350	185	80	150	8×19	18
100	1.6	250	380	210	100	175	8×19	22
125	1.6	250	420	250	125	210	8×23	30
150	1.6	300	450	280	150	240	8×23	37
200	1.6	350	500	330	200	290	12×23	50
250	1.6	400	570	400	250	355	12×25	76
300	1.6	500	610	445	300	400	16×25	100
350	1.6	500	660	490	350	445	16×25	138
400	1.6	600	730	560	400	510	16×27	167
450	1.6	600	790	620	450	565	20×27	190
500	1.0	600	840	675	500	620	20×27	210
600	1.0	600	960	795	600	730	24×33	275
700	1.0	700	1070	905	700	840	24×33	350
800	1.0	800	1190	1020	800	950	28×33	450

▶ Dimensions (Separate type)

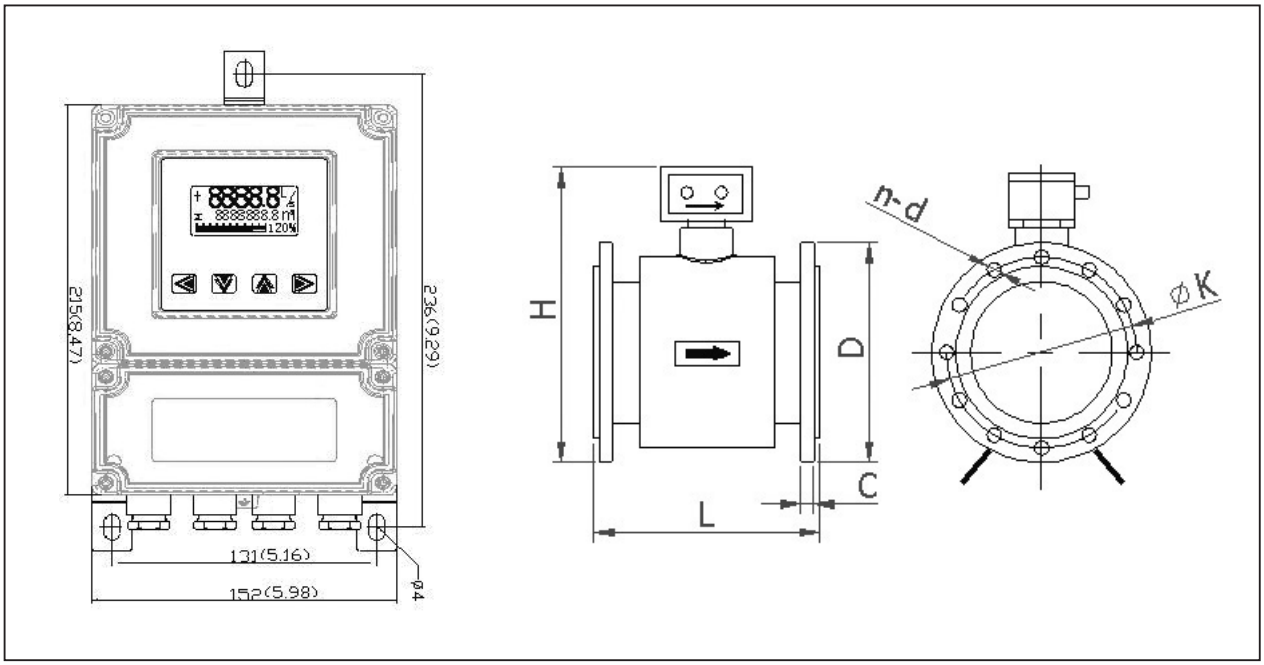

Size (mm)	Pressure Limits(Mpa)	Outline size(mm)	
		L	H
10	4.0	160	300
15	4.0	160	300
20	4.0	200	310
25	4.0	200	320
32	4.0	200	320
40	4.0	200	320
50	4.0	200	330
65	4.0	200	340
80	4.0	200	350
100	1.6	250	380
125	1.6	250	420
150	1.6	300	450
200	1.6	350	500
250	1.6	400	600
300	1.6	500	610
350	1.6	500	660
400	1.6	600	730
450	1.0	600	790
500	1.0	600	840
600	1.0	600	960
700	1.0	700	1070
800	1.0	800	1190

Flange size (mm)			
D	K	n-d	C
90	65	4×15	16
95	70	4×15	16
100	75	4×15	18
125	90	4×19	21
135	100	4×19	21
140	105	4×19	21
155	120	4×19	23
175	140	4×19	25
185	150	8×19	27
210	175	8×19	22
250	210	8×23	22
280	240	8×23	24
330	290	12×23	24
400	355	12×25	26
445	400	12×25	28
490	445	16×25	30
560	510	16×27	32
620	565	20×27	34
675	620	20×27	28
795	730	24×33	30
905	840	24×33	30
1020	950	24×33	32

▶ External connections

• Combined type E–MAG– I flowmeters

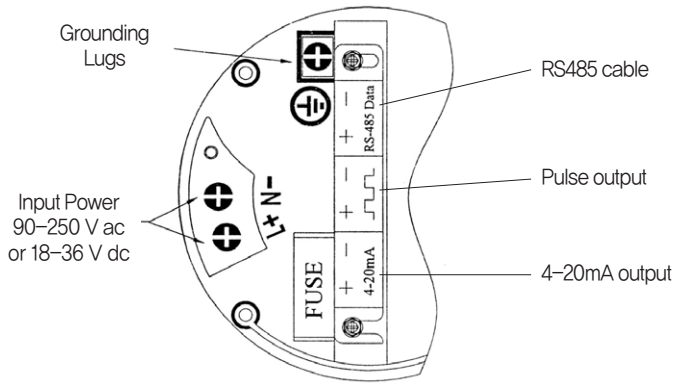

Symbol	Description	Cable
L + L – N – FG	Power supply Frame grand	Power cable
4–20mA + –	Current output (4–20mAdc)	I/O cable
⎍⎍⎍ + –	Digital output (Open collector pulse)	
RS485 data + –	RS485 communicative	

• Separate type E-MAG-R flowmeter

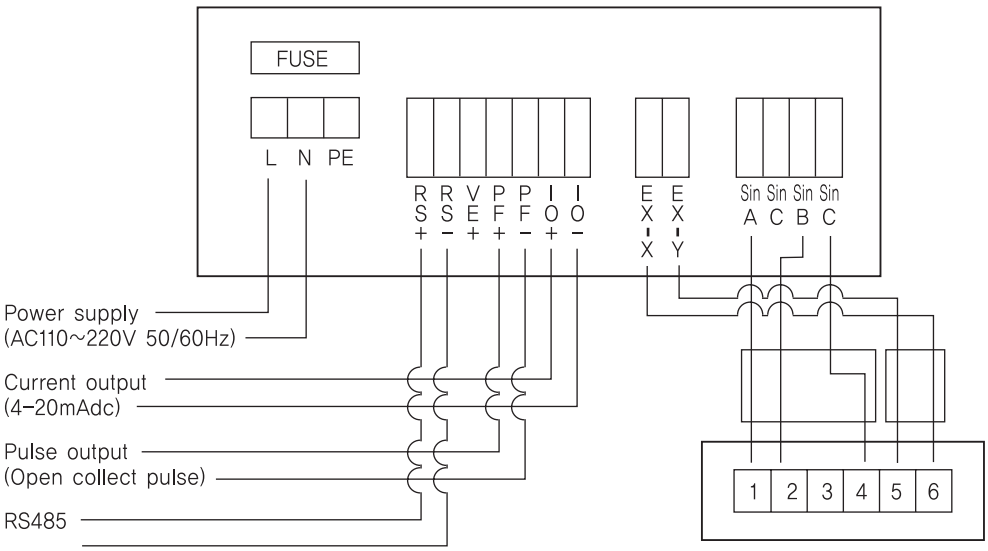

Sin-A-① Sin-B-② Sin-C-④
EX-X-⑤ EX-Y-⑥

Symbol	Description	Cable
L N	Power supply	Power cable
IO + IO –	Current output (4-20mAdc)	I/O cable
PF + PF –	Digital output (Open collector pulse)	
RS + RS –	RS485 communicative (option)	
EX-X EX-Y	Excitation output	X(black) Y(green)
Sin A Sin B Sin C	Signal input	A(red) B(ground) C(yellow)

▶ Sheet of flow velocity vs flowrate (Size & Flowrange)

Meter size (mm)	Flow rate (unit : m³/h)		
	0.3m/s (Min)	1m/s	10m/s (Max)
10	0.10	0.27	2.7
15	0.19	0.63	6.3
20	0.40	0.90	9
25	0.53	1.76	17.6
32	0.86	2.89	28.9
40	1.35	4.52	45.23
50	2.12	7.06	70.67
65	3.58	11.95	119.5
80	5.42	18.09	180.9
100	8.48	28.27	282.7
125	13.25	44.17	441.7
150	19.08	63.61	636.1
200	33.93	113.1	1,131
250	53.01	176.7	1,767
300	76.34	254.5	2,545
350	103.9	346.4	3,464
400	135.7	452.3	4,523
450	171.7	572.5	5,725
500	212.1	706.9	7,069
600	305.4	1,018	10,180
700	580	1,320	13,200
800	850	1,800	18,000
900	1,000	2,400	24,000
1,000	1,150	2,700	27,000

★본 카다로그에 기재된 사양, 외형, 치수는 제품 개발을 위하여 변경 될 수 있습니다.

AUTO FLOW 유량계 전문제작/판매 (株)오토후로
서울특별시 구로구 구로동 170-13번지 벽산디지털밸리 7차 707호
TEL:(02)2691-7552 / 2614-9464 FAX:(02)2613-9463
http://www.autoflow.co.kr E-mail :autoflow@autoflow.co.kr