www.hkvalve.net



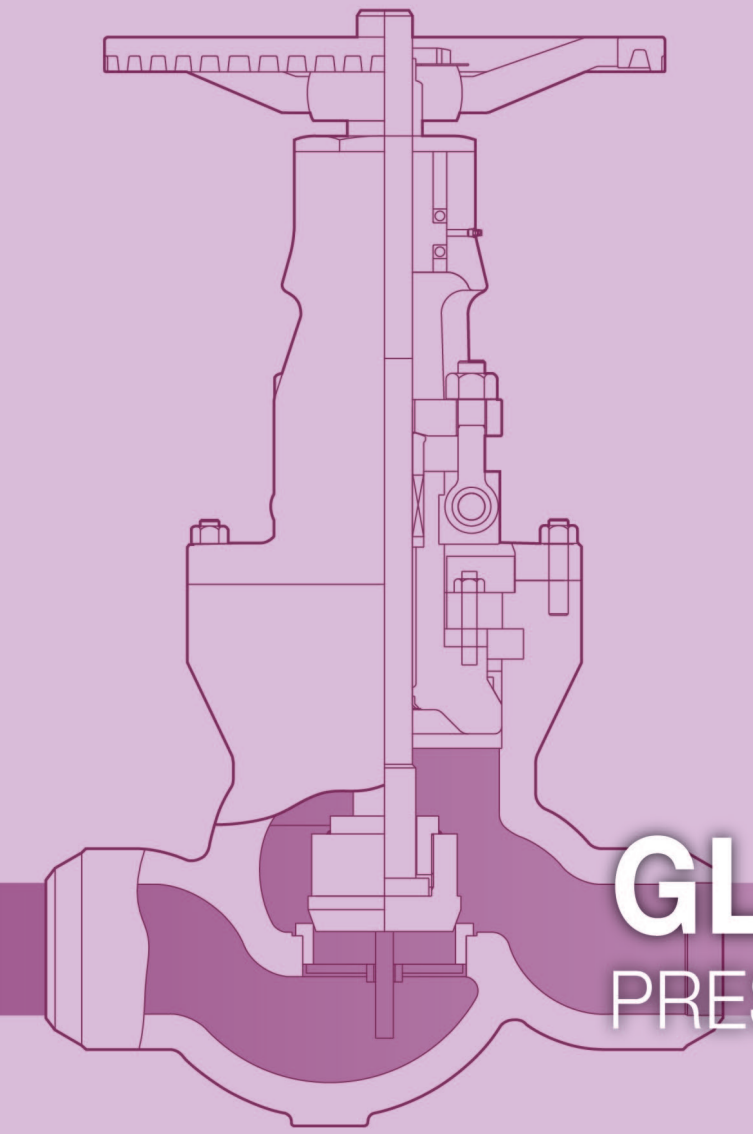

GLOBE VALVES
PRESSURE SEAL BONNET

CAST STEEL
GLOBE VALVES PRESSURE SEAL BONNET

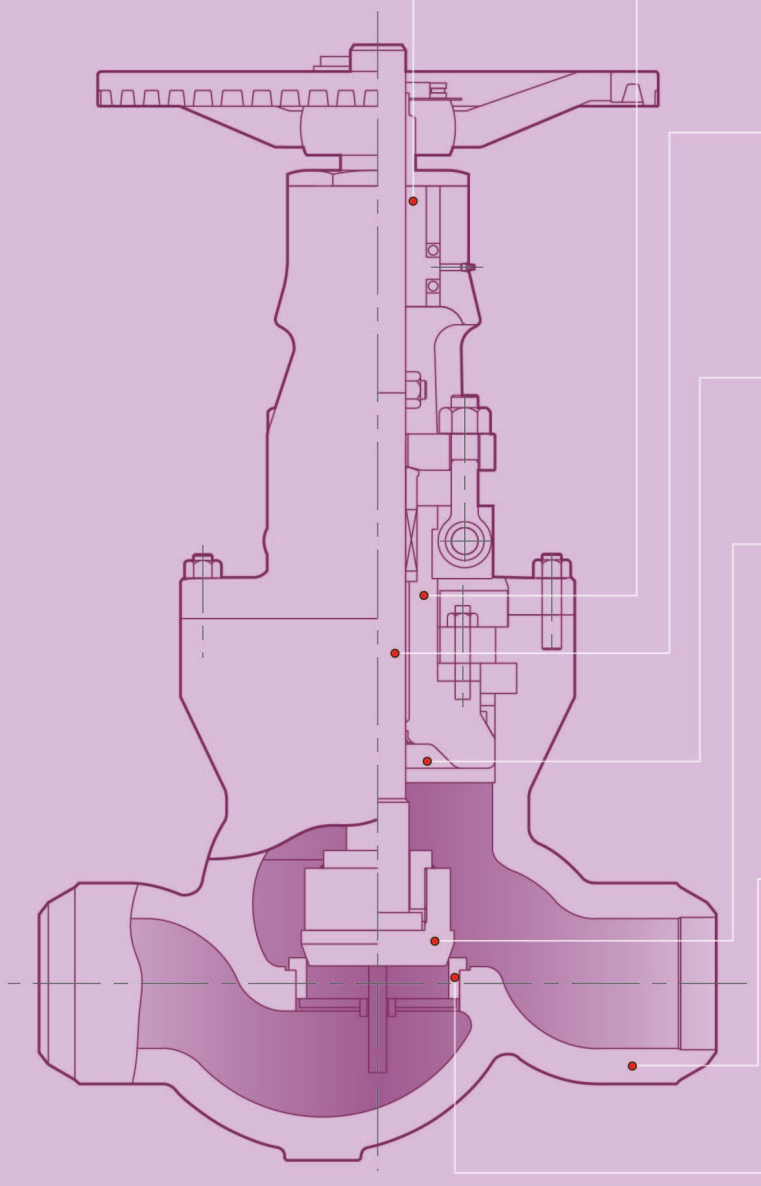

YOKE SLEEVE
The standard material of the Yoke Sleeve is Nodular Ni-resist D2 with over 1150 C(2100 F) dissolution point conformity with API Std. specifications.

BONNET
The bonnet is of a steel forging identical to the body to insure high reliability. The bonnet has a perfect body-bonnet seal and both ease of dismantling and reassembly are ensured. The body and bonnet of our valves are carefully machined to achieve perfect coaxiality and eliminate any misalignment which may cause damaged stems.

STEM
The stem, of one-piece construction, is heat treated to secure the adequate mechanical properties and surface, hardness. Accurate machining and grinding insure that there is minimized friction during valve opening/shutting. The round head of the stem gives a point contact with the inside of the disc housing and thus prevents galling.

BACK SEAT
All of our valves are equipped with a backseat to allow packing replacement with the valve fully opened. The conical shape contact seat in the bonnet assembly in integrally stellite faced.

DISC
The disc of our globes is a loose disc which freely revolves around the stem, thereby preventing friction and galling with the seating surface when the valve is shut.
The outside diameter of the disc is a accurately finished and cylindrical on shape to travel along the body guides.
A stellite 6 layer is applied to the conical seating surface of the disc. The deposit Undergoes a special heat treatment to secure the required hardness and soundness. In addition, the lapped finish insures a perfect mating with the seats.

BODY
The cylindrically shaped valve body prevents distortion or undue stress under extreme working conditions. In addition adequate padding endures a sound cast structure in the critical areas. The wall thickness is greater than or in accordance with API, ANSI and ASME requirements. The area contacting the pressure seal gasket gas a stainless steel 18/8 inlay eliminate corrosion or wire drawing, The close tolerances of the inside diameter of this area attained by accurate machining and holding finish.

SEAT
The stellite 6 seating surface is integrally applied to the body by means of welding in all valve sizes. Perfect mating the disc surfaces is achieved by lapping applied to the seating surface.

CAST STEEL

NO	NAME OF PART	ASTM SPECIFICATION						
		STANDARD	HIGH TEMPERATURE SERVICE				LOW TEMP. SERVICE	
1	BODY	A216-WCB	A217-WC1	A217-WC6	A217-WC9	A217-C5	A352-LCB	A352-LC1/LC2/LC3
2	BONNET	A216-WCB	A217-WC1	A217-WC6	A217-WC9	A217-C5	A352-LCB	A352-LC1/LC2/LC3
3	DISC	A216-WCB+HF	A217-WC1+HF	A217-WC6+HF	A217-WC9+HF	A217-C5+HF	A352-LCB+304	A352-LC1/LC2/LC3
5	STEM	A276-410	A276-410	A276-410	A276-410	A276-410	A276-304	A276-304
6	DISC GLAND	A276-410	A276-410	A276-410	A276-410	A276-410	A276-304	A276-304
8	PACKING GLAND	A276-410	A276-410	A276-410	A276-410	A276-410	A276-304	A276-304
9	GLAND FLANGE	A283-D	A283-D	A283-D	A283-D	A283-D	A283-D	A283-D
10	YOKE SLEEVE	A439-D2	A439-D2	A439-D2	A439-D2	A439-D2	A439-D2	A439-D2
11	BONNET FLANGE BOLT	A193-B7	A193-B7	A193-B7	A193-B7	A193-B7	A320-L7	A320-L7
13	GLAND BOLT	A307-B	A307-B	A307-B	A307-B	A307-B	A307-B	A307-B
14	GLAND NUT	A307-B	A307-B	A307-B	A307-B	A307-B	A307-B	A307-B
26	YOKE	A216-WCB	A216-WCB	A216-WCB	A216-WCB	A216-WCB	A216-WCB	A216-WCB
27	YOKE BOLT	A193-B7	A193-B7	A193-B7	A193-B7	A193-B7	A193-B7	A193-B7
28	YOKE NUT	A194-2H	A194-2H	A194-2H	A194-2H	A194-2H	A194-2H	A194-2H
31	STOPPER PIN	A307-B	A307-B	A307-B	A307-B	A307-B	A307-B	A307-B
32	PACKING WASHER	A276-410	A276-410	A276-410	A276-410	A276-410	A276-304	A276-304
33	RETAINER	A276-410	A276-410	A276-410	A276-410	A276-410	A276-304	A276-304
34	HINGE CLAMP	A216-WCB	A216-WCB	A216-WCB	A216-WCB	A216-WCB	A216-WCB	A216-WCB
35	BONNET CLAMP	A108-1045	A108-1045	A108-1045	A108-1045	A108-1045	A108-1045	A108-1045
37	GASKET SPACER	A276-410	A276-410	A276-410	A276-410	A276-410	A276-304	A276-304

NO	NAME OF PART	ASTM SPECIFICATION
15	**HANDLE NUT**	STEEL
16	**SET SCREW**	STEEL
19	**HANDWHEEL**	A395
21	**PACKING**	SEE PAGE 63
22	**GASKET**	SEE PAGE 63
30	**STOPPER**	A283-D

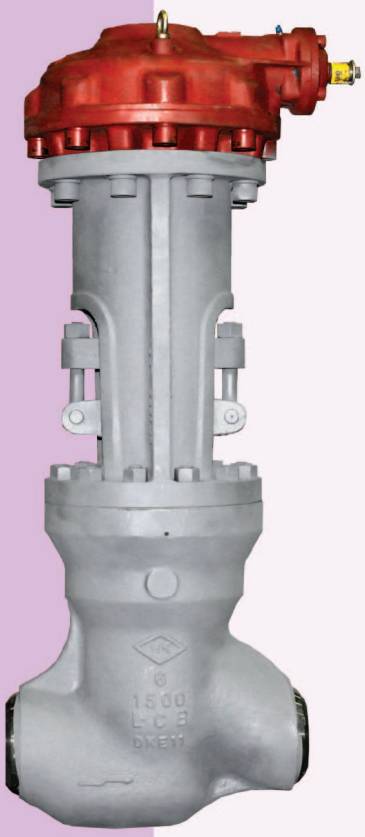

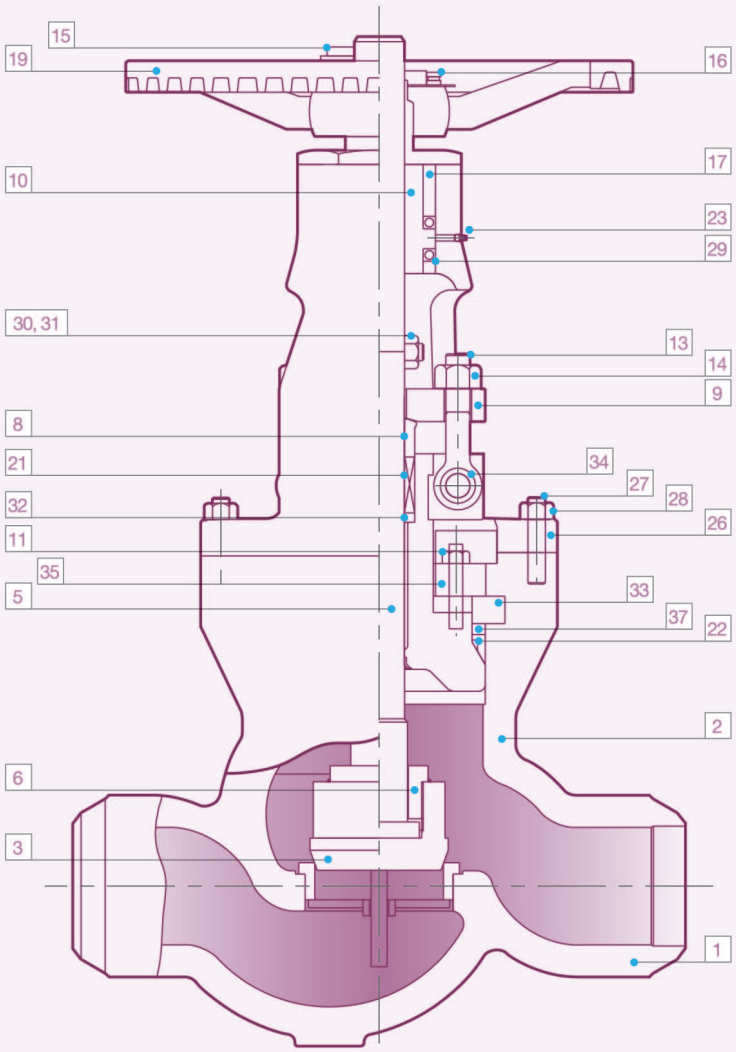

ASME CLASS 600LB

GLOBE VALVES
PRESSURE SEAL BONNET
CAST STEEL

VALVE SIZE		2	2 1/2	3	4	6	8	10	12	14	16
		50	65	80	100	150	200	250	300	350	400
L3	inch	7.0	8.5	10.0	12.0	18.0	23.0	28.0	32.0	35.0	39.0
	mm	178	216	254	305	457	584	711	813	889	991
L2	inch	11.62	13.12	14.12	17.12	22.12	26.12	31.12	33.12	35.12	39.12
	mm	295	333	359	435	562	664	791	841	892	994
L1	inch	11.5	13.0	14.0	17.0	22.0	26.0	31.0	33.0	35.0	39.0
	mm	292	330	356	432	559	660	787	838	889	991
H	inch	21.7	24.8	26.8	29.5	453	49.2	55.1	61.0	70.9	85.0
	mm	550	630	680	750	1150	1250	1400	1550	1800	2160
W	inch	9.8	11.8	11.8	17.7	23.6	18.1	24.0	24.0	24.0	29.9
	mm	250	330	300	450	600	460	610	610	610	760
L	inch	-	-	-	-	-	20.2	17.0	20.2	20.2	22.3
	mm	-	-	-	-	-	512	432	512	512	567
WEIGHT	LB	992	121.2	187.4	297.7	672.5	1367.1	2883.6	4189.5	5997.6	6945.8
	Kg	45	55	85	135	305	620	1310	1900	2720	3150

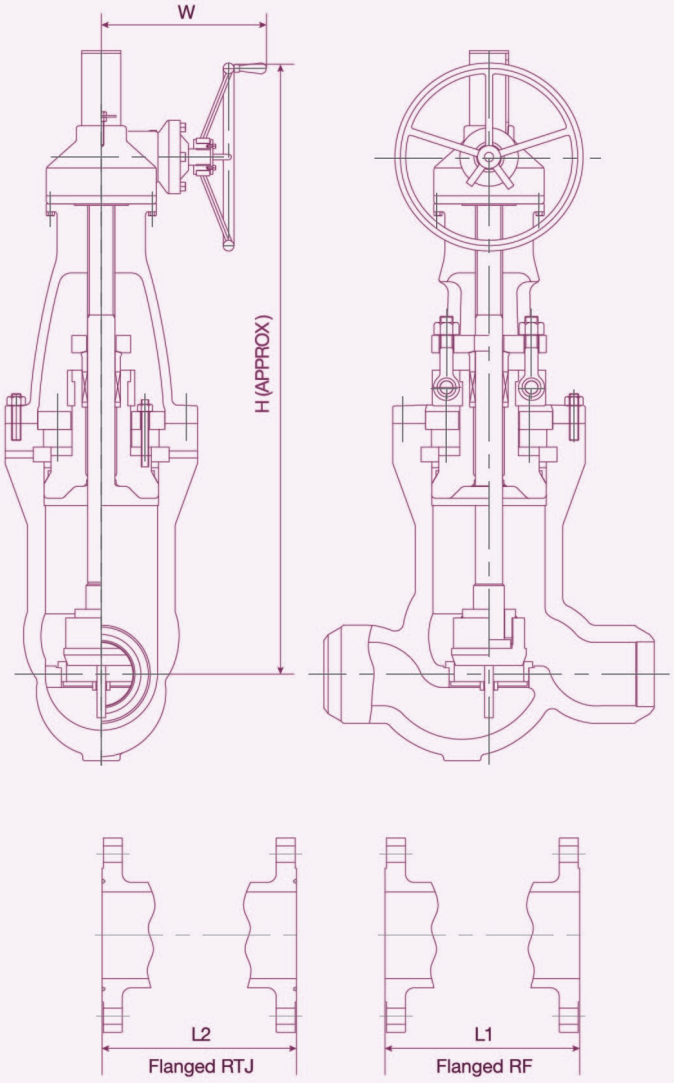

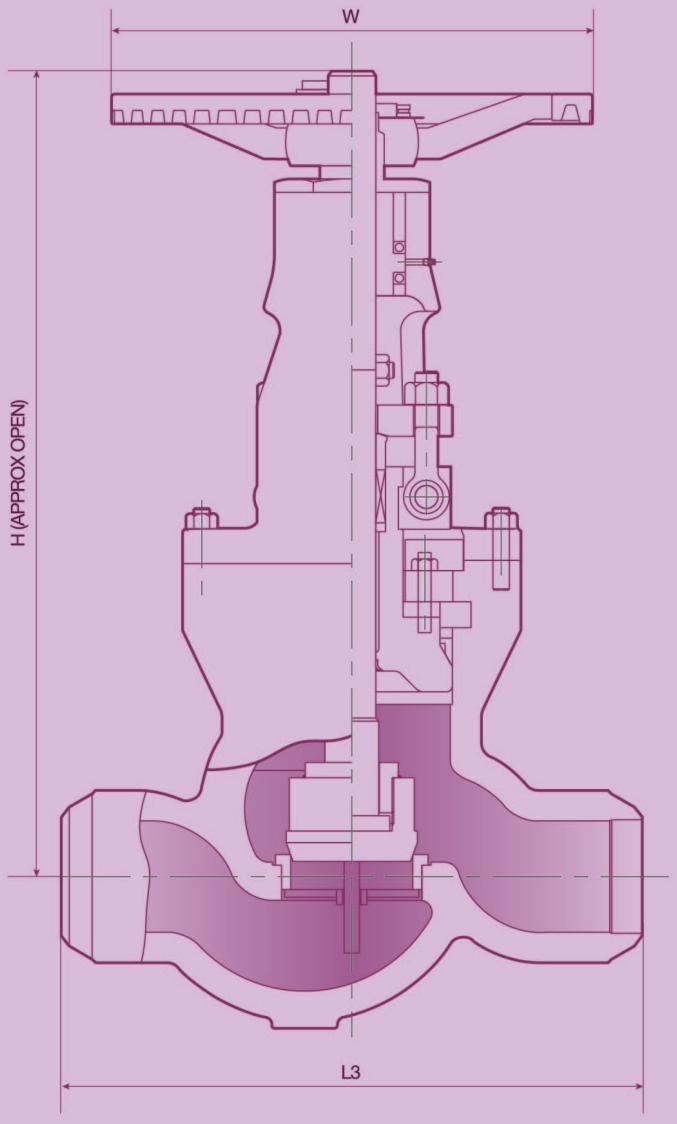

GLOBE VALVES
PRESSURE SEAL BONNET
CAST STEEL

ASME CLASS 900LB

VALVE SIZE		2	2 1/2	3	4	6	8	10	12	14	16
	mm	50	65	80	100	150	200	250	300	350	400
L3	inch	8.5	10.0	12.0	14.0	20.0	26.0	31.0	36.0	39.0	43.0
	mm	216	254	305	356	508	660	787	914	991	1092
L2	inch	14.62	16.62	15.12	18.12	24.12	29.12	33.12	28.12	40.88	44.88
	mm	371	422	384	460	613	740	841	968	1038	1140
L1	inch	14.5	16.5	15.0	18.0	24.0	29.0	33.0	38.0	40.5	44.5
	mm	368	419	381	457	610	737	838	965	1029	1130
H	inch	24.4	25.3	28.4	33.5	48.2	53.1	61.0	58.9	78.7	90.9
	mm	619	641	721	850	1225	1350	1550	1750	2000	2310
W	inch	15.7	15.7	15.7	19.7	24.0	24.0	24.0	24.0	29.9	29.9
	mm	400	400	400	500	610	610	610	610	760	760
L	inch	-	-	-	-	20.2	17.0	20.2	20.2	22.3	22.3
	mm	-	-	-	-	512	432	512	512	567	567
WEIGHT	LB	176.4	242.6	231.5	374.9	926.1	2205.0	3792.6	5071.5	7386.8	8820.0
	Kg	80	110	105	170	420	1000	1720	2300	3350	4000

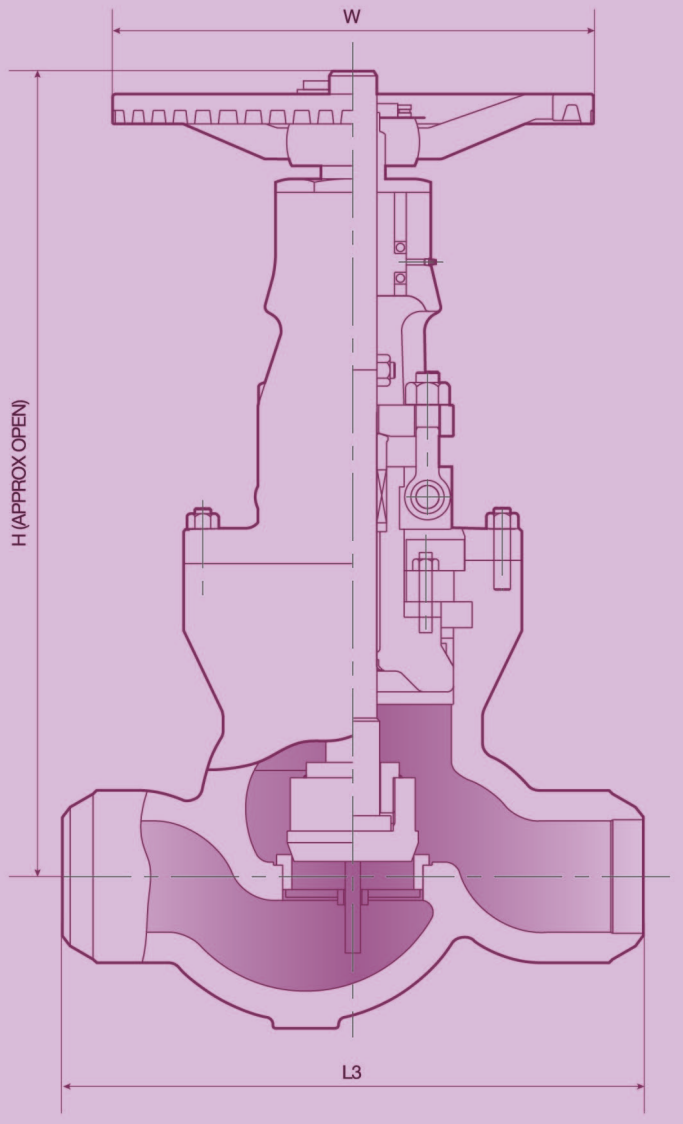

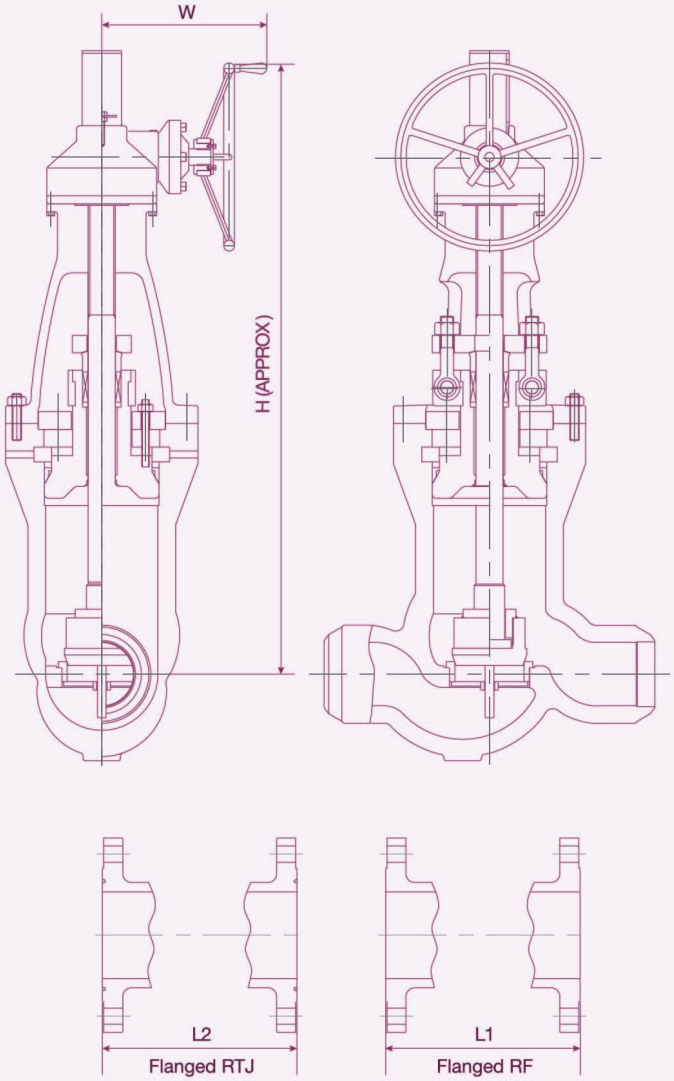

ASME CLASS 1500LB

GLOBE VALVES
PRESSURE SEAL BONNET
CAST STEEL

VALVE SIZE		2	2 1/2	3	4	6	8	10	12	14
		50	65	80	100	150	200	250	300	350
L3	inch	8.5	10.0	12.0	16.0	22.0	28.0	34.0	39.0	42.0
	mm	216	251	305	406	559	711	864	991	1067
L2	inch	14.92	16.62	18.62	21.62	28.0	33.13	39.38	45.12	50.25
	mm	371	422	473	549	711	842	1000	1146	1276
L1	inch	14.5	16.5	18.5	21.5	27.75	32.75	39.0	44.5	49.5
	mm	368	419	470	546	705	832	991	1130	157
H	inch	24.4	25.3	332.9	33.8	48.4	70.9	78.7	91.0	105.9
	mm	619	641	835	857	1230	1800	2000	2311	2691
W	inch	15.7	15.7	19.7	19.7	24.0	24.0	29.9	29.9	29.9
	mm	400	400	500	500	610	610	760	760	760
L	inch	-	-	-	-	20.2	20.2	20.2	20.2	22.3
	mm	-	-	-	-	512	512	512	512	567
WEIGHT	LB	176.4	242.6	299.9	496.1	1433.3	3704.4	5909.4	7497	9481.5
	Kg	80	110	136	225	650	1680	2680	3400	4300

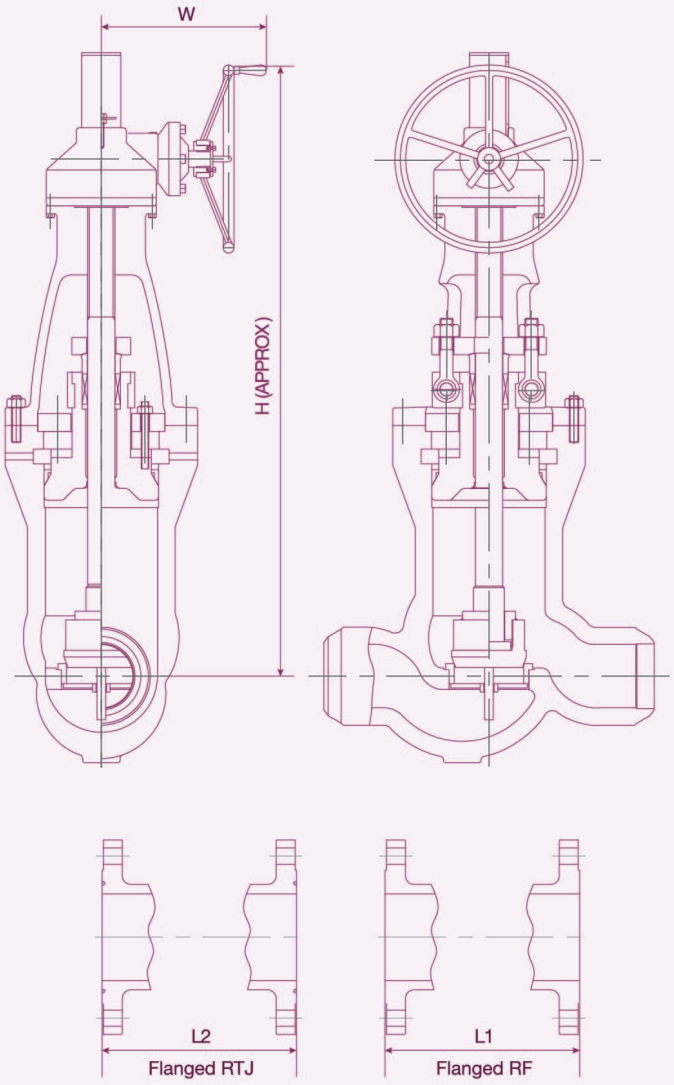

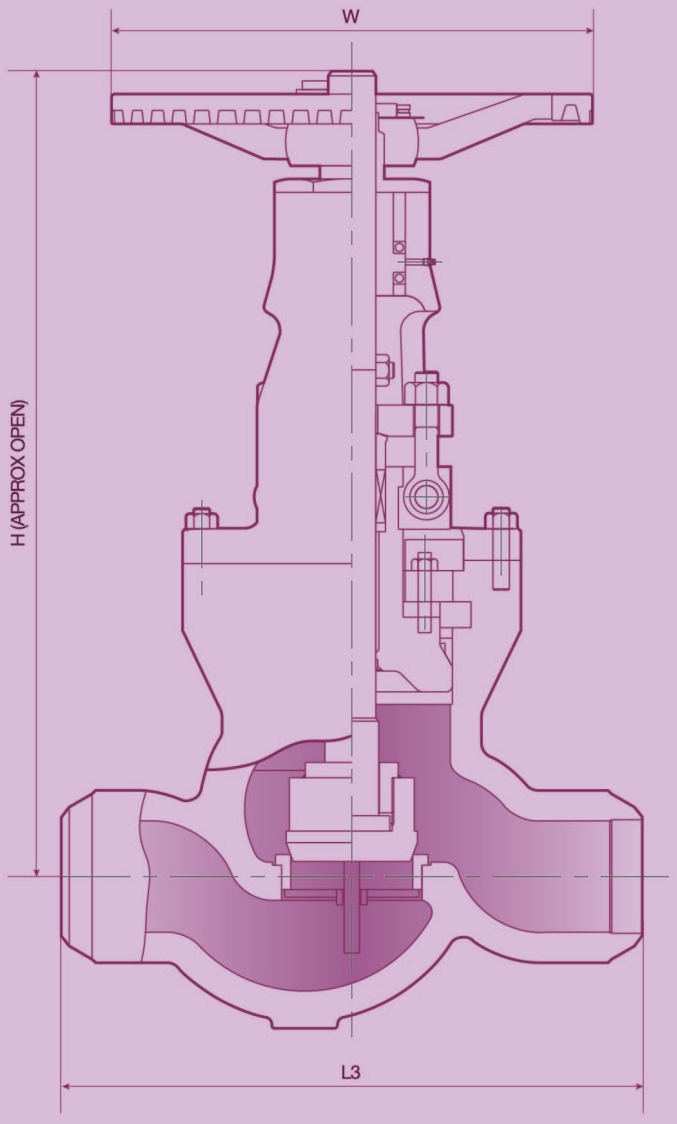

GLOBE VALVES
PRESSURE SEAL BONNET
CAST STEEL

ASME CLASS **2500**LB

VALVE SIZE		2	2 1/2	3	4	6	8	10	12
		50	65	80	100	150	200	250	300
L3	inch	11.0	13.0	14.5	18.0	24.0	30.0	36.0	41.0
	mm	279	330	368	457	610	762	914	1041
L2	inch	17.87	20.25	23.0	26.88	36.5	40.87	50.88	56.88
	mm	454	514	584	683	927	1038	1292	1445
L1	inch	17.75	20.0	22.75	26.5	36.0	40.25	50.0	56.0
	mm	451	508	578	673	914	1022	1270	1422
H	inch	24.3	30.7	31.5	51.2	53.9	85.0	100.0	106.0
	mm	616	781	800	1300	1370	2160	2540	2692
W	inch	15.7	19.7	19.7	24.0	24.0	29.9	29.9	29.9
	mm	400	500	500	610	610	760	760	760
L	inch	-	-	-	20.2	174.0	22.3	22.3	22.3
	mm	-	-	-	512	432	567	567	567
WEIGHT	LB	220.5	341.8	463.1	1102.5	2756.3	5292.0	8186.5	9261.0
	Kg	100	155	210	500	1250	2400	3300	4200

