STANDARD EQUIPMENT

ISO Standard cabin
- All-weather steel cab with 360° visibility
- Safety glass windows
- Rise-up type windshield wiper
- Sliding side window(LH)
- Lockable door
- Hot & cool box
- Storage compartment & Ashtray
- Transparent cabin roof-cover
- Radio / USB Player
- 12 volt power outlet (24V DC to 12V DC converter)
- Handsfree mobile phone system with USB
- Sun visor

Computer aided power optimization (New CAPO) system
- 3-power mode, 2-work mode, User mode
- Auto deceleration & one-touch deceleration system
- Auto warm-up system
- Auto overheat prevention system

Automatic climate control
- Air conditioner & heater
- Defroster

Self-diagnostics system

Starting Aid (air grid heater) for cold weather

Centralized monitoring
- LCD display
- Engine speed or Trip meter/Accel.
- Clock
- Gauges
- Fuel level gauge
- Engine coolant temperature gauge
- Hyd. oil temperature gauge
- Warnings
- Check Engine
- Overload
- Communication error
- Low battery
- Air cleaner clogging
- Indicators
- Max power
- Low speed/High speed
- Fuel warmer
- Auto idle

Door and cab locks, one key

Three outside rearview mirrors

Mechanical suspension seat with heater

Pilot-operated slidable joystick

Console box height adjust system

Four front working lights

Electric horn

Batteries (2 x 12V x 100 AH)

Battery master switch

Removable clean-out dust net for oil cooler

Automatic swing brake

Removable reservoir tank

Fuel pre-filter with fuel warmer

Boom holding system

Arm holding system

Track shoes (600mm, 24")

Track rail guard

Accumulator for lowering work equipment

Electric transducer

Lower frame under cover (Normal)

OPTIONAL EQUIPMENT

Fuel filler pump (50 L/min)

Beacon lamp

Safety lock valve for boom cylinder with overload warning device

Safety lock valve for arm cylinder

Single-acting piping kit (breaker, etc.)

Double-acting piping kit (clamshell, etc.)

Quick coupler

Travel alarm

Booms
- 5.68 m, 18′ 8″
- 5.68 m, 18′ 8″ Heavy duty
- 8.2 m, 26′ 11″ Long reach

Arms
- 2.0 m, 6′ 7″
- 2.4 m, 7′ 10″
- 2.92 m, 9′ 7″
- 2.92 m, 9′ 7″ Heavy duty
- 3.9 m, 12′ 10″
- 6.3 m, 20′ 8″ Long reach

Climate control
- Air conditioner only
- Heater only

Cabin FOPS/FOG (ISO/DIS 10262 Level II)
- FOPS (Falling Object Protective Structure)
- FOG (Falling Object Guard)

Cabin ROPS (ISO 12117-2)
- ROPS (Roll Over Protective Structure)

Cabin guard front
- Wire net
- Fine net

Cabin roof-steel cover

Cabin lights

Cabin front window rain guard

Track shoes
- Triple grousers shoe (700 mm, 28″)
- Triple grousers shoe (800 mm, 32″)
- Triple grousers shoe (900 mm, 36″)
- Double grousers shoe (700 mm, 28″)
- Full track rail guard(High walker only)

Lower frame under cover (Additional)

Tool kit

Operator suit

Rearview camera

Seat
- Adjustable air suspension seat
- Adjustable air suspension seat with heater
- Mechanical suspension seat

Pattern change valve (2 patterns)

Hi-mate (Remote Management System)

Air compressor

* Standard and optional equipment may vary. Contact your Hyundai dealer for more information. The machine may vary according to International standards.
* The photos may include attachments and optional equipment that are not available in your area.
* Materials and specifications are subject to change without advance notice.
* All imperial measurements rounded off to the nearest pound or inch.

PLEASE CONTACT

www.hyundai-ce.com 2015. 11 Rev 5

HYUNDAI HEAVY INDUSTRIES
CONSTRUCTION EQUIPMENT
Head Office
1000 BANGEOJINSUNHWAN-DORO, DONG-GU, ULSAN, 682-792, KOREA
TEL:(82)52-202-7722, 9807 FAX:(82)52-202-7720

999009-500630

We build a better future

Robex 210LC-9

With Tier 3 Engine installed



*Photo may include optional equipment.

HYUNDAI HEAVY INDUSTRIES

Pride at Work

Hyundai Heavy Industries strives to build state-of-the art earthmoving equipment to give every operator maximum performance, more precision, versatile machine preferences, and proven quality. Take pride in your work with Hyundai!



*Photo may include optional equipment.

Machine Walk-Around

Engine Technology

Proven / reliable, fuel efficient HYUNDAI HE 6.7 engine
Electronically controlled for optimum fuel to air ratio and clean, efficient combustion
Low noise / Auto engine warm up feature / Anti-restart feature

Hydraulic System Improvements

New patented hydraulic control for improved controllability / Improved control valve design for added efficiency and smoother operation / New auto boom and swing priority system for optimum speed / New auto power boost feature for additional power when needed / Improved arm-in and boom-down flow regeneration system for added speed and efficiency

Pump Compartment

Industry-leading, powerful, reliable Kawasaki designed, variable volume in-line axial piston pumps
New compact solenoid block equipped with 4 solenoid valves, 1 EPPR valve, 1 check valve accumulator and pilot filter - controls 2 speed travel, power boost, boom priority, safety lock, arm regeneration

Enhanced Operator Cab

Improved Visibility
Enlarged cab with improved visibility / See-through upper skylight for visibility and ventilation
Larger right-side glass, now one piece, for better right visibility
Safety glass windows on all sides - less expensive than (polycarbonate) and won't scratch or fade
Closeable sunshade for operator convenience / Reduced front window seam for improved operator view

Improved Cab Construction
New steel tube construction for added operator safety, protection and durability
New window open/close mechanism designed with cable and spring lift assist and single latch release

Improved Suspension Seat / Console Assembly
Ergonomic joysticks with auxiliary control buttons for attachment use. Now with new sleek styling
Heated suspension (standard) or optional air ride suspension with heat
New joystick consoles - now adjustable in height by way of dial at bottom
Adjustable arm rests - turn dial to raise or lower for optimum comfort

Advanced 7" Color Cluster
New Color LCD Display with easy to read digital gauges for hydraulic oil temperature, water temperature, and fuel. Simplified design makes adjustment and diagnostics easier. Also, new enhanced features such as rear-view camera are integrated into monitor.
3 power modes : (P) Power, (S) Standard, (E) Economy, 2 work modes : Dig & Attachment, (U) User mode for operator preference
Enhanced self-diagnostic features with GPS download capability
One pump flow or two pump flow for optional attachment is now selectable through the cluster / New anti-theft system with password capability
Boom speed and arm regeneration are selectable through the monitor.
Auto power boost is now available - selectable (on/off) through the monitor.
Powerful air conditioning and heat with auto climate control, 20% more heat and air output than 7A series!
RMS (Remote Management System) works through GPS/satellite technology to ultimately provide better customer service and support.

Undercarriage

Sealed track chain (urethane seals) / Standard track rail guard / Comfortable bolt-on steps
Large upper roller cut-outs for debris clean-out / Tapered side frames for debris clean-out / Grease-type track tensioner

Preference

Operating a 9 series is unique to every operator. Operators can fully customize their work environment and operating preferences to fit their individual needs.

*Photo may include optional equipment.



Wide Cabin with Excellent Visibility

The newly designed cabin was conceived for more space, a wider field of view and operator comfort. Special attention was given to a clear, open and convenient interior with plenty of visibility on the machine surroundings and the job at hand. This well balanced combination of precision aspects put the operator in the perfect position to work safely and securely.

Operator Comfort

In 9 series cabin you can easily adjust the seat, console and armrest settings to best suit your preferred comfort level. Seat and console position and height can be set together and independent from each other. Other preference settings that add to overall operator comfort include the full automatic high capacity airconditioning system and the Radio / USB player.





Reduced Stress

Work is stressful enough. Your work environment should be stress free. Hyundai's 9 series provides improved cab amenities, additional space and a comfortable seat to minimize stress to the operator. A powerful climate control system provides the operator with optimum air temperature. An advanced audio system with USB player, AM/FM stereo, plus remotely located controls is perfect for listening to music favorites.
Operators can even talk on the phone with the hands-free cell phone feature.



Operator - Friendly Cluster

The advanced new cluster with 7 inch wide color LCD screen and toggle switch allows the operator to select his personal machine preferences. Power and work mode selection, self diagnostics, optional rear-view camera, maintenance check lists, start-up machine security, and video functions were integrated into the cluster to make the machine more versatile and the operator more productive.



Precision

Innovative hydraulic system technologies make the 9 series excavator fast, smooth and easy to control.

*Photo may include optional equipment.

Computer Aided Power

The engine horsepower and hydraulic horsepower together in unison through the advanced CAPO(Computer Aided Power Optimization) system, flow for the job at hand. Operator can set their own preferences for boom or swing priority, power mode selection and optional work tools at the touch of a button.
The CAPO system also provides complete self diagnostic features and digital gauges for important information like hydraulic oil temperature, water temperatures and fuel level. This system interfaces with multiple sensors placed throughout the hydraulic system as well as the electronically controlled engine to provide the optimum level of engine power and hydraulic flow.

Power Mode

P (Power Max) mode maximizes machine speed and power for mass production.
S (Standard) mode provides a reduced, fixed rpm for optimum performance and improved fuel economy. For maximum fuel savings and improved control, E (Economy) mode provides precise flow and engine power based on load demand. Three unique power modes provide the operator with custom power, speed and fuel economy.

Work Mode

The work mode allows the operator to select single flow attachments like a hydraulic breaker or bi-directional flow attachments like a crusher. Flow settings unique to each attachment can be programmed from within the cluster.

User Mode

Some jobs require more precise machine settings. Using the versatile U (User) mode, the operator can customize engine speed, pump output, idle speed and other machine settings for the job at hand.

Improved Hydraulic System



To achieve optimum precision, Hyundai redesigned the hydraulic system to provide the operator with super fine touch and improved controllability. Improved pump flow control reduces flow when controls are not being used to minimize fuel consumption.
Improved spool valves in the control valve are engineered to provide more precise flow to each function with less effort.
Improved hydraulic valves, precision-designed variable volume piston pumps, fine-touch pilot controls, and enhanced travel functions make any operator running a 9 series look like a smooth operator. Newly improved features include arm-in and boom-down flow regeneration, improved control valve technology and innovative auto boom and swing priority for optimal performance in any application.



Auto Boom-swing Priority

This smart function automatically and continuously looks the ideal hydraulic flow balance for the boom and swing motions of the machine. The advanced CAPO system monitors the hydraulic system and adjusts its settings to maximize performance and productivity.

Performance

9 series is designed for maximum performance to keep the operator working productively.

*Photo may include optional equipment.



Track Rail Guard & Adjusters

Durable track rail guards keep track links in place. Track adjustment is made easy with standard grease cylinder track adjusters and shock absorbing springs.

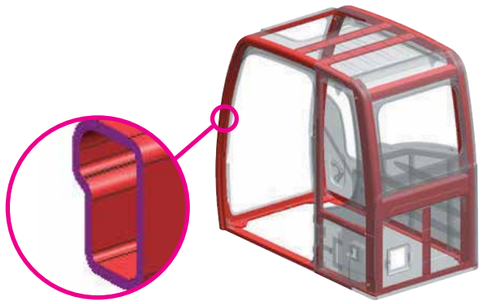

Structure Strength

The 9 series cabin structure has been fitted with stronger but slimmer tubing for more safety and improved visibility. Low-stress, high strength steel is integrally welded to form a stronger, more durable upper and lower frame. Structural integrity was tested by way of FEM (Finite Elements Method) analysis and long-term durability tests.
The optional ROPS(Roll Over Protective Structure) cab can be equipped to enhance operator safety.

HYUNDAI HE 6.7 Engine

The Tier III compliant, six cylinder, turbo-charged, 4 cycle, water cooled, HYUNDAI HE 6.7 engine is built for power, reliability, efficiency and reduced emissions.

Heavy-duty strength

HYUNDAI HE 6.7 engine combines full-authority electronic controls with reliable performance.
HYUNDAI HE 6.7 engine electronics have been used in our high-horsepower products in the harshest, most demanding environments, including dusty, nonstop mining operations, and meet worldwide emissions regulations.
HYUNDAI HE 6.7 engine features 24 valves designed with centered injectors and a symmetrical piston bowl.
The combination of improved airflow and evenly dispersed fuel results in increased power, improved transient response, and reduced fuel consumption.



Profitability

9 series is designed to maximize profitability through improved efficiencies, enhanced service features and longer life components.

*Photo may include optional equipment.

Fuel Efficiency

9 series excavators are engineered to be extremely fuel efficient. New innovations like the variable speed fan clutch, two-stage auto decel system and the new economy mode help to conserve fuel and reduce the impact on the environment.



Hi-mate (Remote Management System)

Hi-mate, Hyundai's proprietary remote management system, provides operators and dealer service personnel access to vital service and diagnostic information on the machine from any computer with internet access. Users can pinpoint machine location using digital mapping and set machine work boundaries, reducing the need for multiple service calls. Hi-mate saves time and money for the owner and dealer by promoting preventative maintenance and reducing machine downtime.



Easy Access

Ground-line access to filters, lube fittings, fuses, machine computer components and wide open compartments makes service more convenient on the 9 series.



Long-Life Components

9 series excavators were designed with bushings designed for long-life lube intervals (250 hrs) & polymer shims (wear resistant, noise reducing), long-life hydraulic filters (1,000hrs), long-life hydraulic oil (5,000hrs), more efficient cooling systems and integrated preheating systems which extend service intervals, minimize operating costs and reduce machine down time.

Specifications

ENGINE

MODEL			HYUNDAI HE 6.7
Type			Water-cooled, 4-cycle Diesel, 6-Cylinder in-line, Direct injection, Turbocharged, Charge air cooled, Low emission
Rated flywheel horsepower	SAE	J1995 (gross)	151HP (113kW)/ 1,900rpm
		J1349 (net)	143HP (107kW)/ 1,900rpm
	DIN	6271/1 (gross)	153PS (113kW)/ 1,900rpm
		6271/1 (net)	145PS (107kW)/ 1,900rpm
Max. torque			63.5kgf·m (459lbf·ft)/1,500rpm
Bore X stroke			107mm X 124mm (4.2" X 4.9")
Piston displacement			6,700cc (409 in^3)
Batteries			2 X 12V X 100AH
Starting motor			24V, 4.5kW
Alternator			24V, 70Amp

HYDRAULIC SYSTEM

MAIN PUMP	
Type	Variable displacement tandem-axis piston pumps
Max. flow	2 X 222 L /min (58.6 US gpm/48.8 UK gpm)
Sub-pump for pilot circuit	Gear pump

Cross-sensing and fuel saving pump system

HYDRAULIC MOTORS	
Travel	Two-speed axial pistons motor with brake valve and parking brake
Swing	Axial piston motor with automatic brake

RELIEF VALVE SETTING	
Implement circuits	350 kgf/cm^2 (4,978 psi)
Travel	350 kgf/cm^2 (4,978 psi)
Power boost (boom, arm, bucket)	380 kgf/cm^2 (5,404 psi)
Swing circuit	265 kgf/cm^2 (3,769 psi)
Pilot circuit	40 kgf/cm^2 (568 psi)
Service valve	Installed

HYDRAULIC CYLINDERS	
No. of cylinder bore X stroke	Boom: 2-120 X1,290 mm (4.7" X 50.8")
	Arm: 1-140 X 1,510 mm (5.5" X 59.4")
	Bucket: 1-120 X 1,055 mm (4.7" X 41.5")

DRIVES & BRAKES

Drive method	Fully hydrostatic type
Drive motor	Axial piston motor, in-shoe design
Reduction system	Planetary reduction gear
Max. drawbar pull	21,100 kgf (46,500lbf)
Max. travel speed (high / low)	5.3 km/hr (3.3 mph) / 3.4 km/hr (2.1 mph)
Gradeability	35° (70 %)
Parking brake	Multi wet disc

CONTROL

Pilot pressure operated joysticks and pedals with detachable lever provide almost effortless and fatigueless operation.

Pilot control	Two joysticks with one safety lever (LH): Swing and arm, (RH): Boom and bucket (ISO)
Traveling and steering	Two levers with pedals
Engine throttle	Electric, Dial type
Lights	Two lights mounted on the boom, one light mounted on the battery box

SWING SYSTEM

Swing motor	Fixed displacement axial pistons motor
Swing reduction	Planetary gear reduction
Swing bearing lubrication	Grease-bathed
Swing brake	Multi wet disc
Swing speed	12.0 rpm

COOLANT & LUBRICANT CAPACITY

	liter	US gal	UK gal
Re-filling			
Fuel tank	400	105.7	88.0
Engine coolant	35	9.2	7.7
Engine oil	24	6.3	5.3
Swing device	5	1.3	1.1
Final drive (each)	6	1.6	1.3
Hydraulic system (including tank)	275	72.6	60.5
Hydraulic tank	160	42.3	35.2

UNDERCARRIAGE

The X-leg type center frame is integrally welded with reinforced box-section track frames. The undercarriage includes lubricated rollers, idlers, track adjusters with shock absorbing springs and sprockets, and a track chain with double or triple grouser shoes.

Center frame	X-leg type
Track frame	Pentagonal box type
No. of shoes on each side	49
No. of carrier rollers on each side	2
No. of track rollers on each side	9
No. of rail guards on each side	2

OPERATING WEIGHT (APPROXIMATE)

Operating weight, including 5,680mm (18' 8") boom, 2,920mm (9' 7") arm, SAE heaped 0.92m^3 (1.20 yd^3) bucket, lubricant, coolant, full fuel tank, full hydraulic tank, and all standard equipments.

MAJOR COMPONENT WEIGHT	
Upperstructure	5,600kg (12,350lb)
Boom (with arm cylinder)	1,950kg (4,300lb)
Arm (with bucket cylinder)	1,095kg (2,410lb)

OPERATING WEIGHT				
Shoes			Operating weight	Ground pressure
Type	Width mm (in)		kg (lb)	kgf/cm^2 (psi)
Triple grouser	600 mm (24")	R210LC-9	21,900 (48,280)	0.46 (6.54)
		R210LC-9 H/W	23,360 (51,500)	0.50 (7.11)
	700 mm (28")	R210LC-9	22,250 (49,050)	0.40 (5.69)
		R210LC-9 H/W	23,710 (52,270)	0.43 (6.11)
	800 mm (32")	R210LC-9	22,515 (49,640)	0.36 (5.12)
		R210LC-9 H/W	23,975 (52,860)	0.38 (5.40)
	900 mm (36")	R210LC-9	22,760 (50,180)	0.32 (4.55)
Double grouser	700 mm (28")	R210LC-9 H/W	24,135 (53,210)	0.43 (6.11)

BUCKETS

All buckets are welded with high-strength steel.

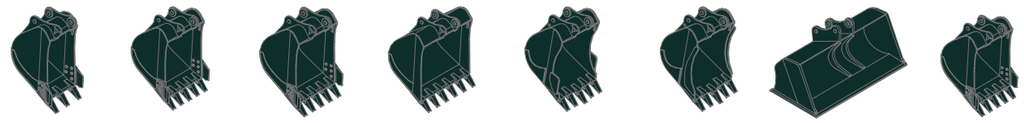

SAE heaped m^3 (yd^3)	0.51 (0.67)	0.80 (1.05) 0.92 (1.20)	1.10 (1.44) 1.20 (1.57)	1.34 (1.75)	◈0.74 (0.97) ◈0.90 (1.18) ◈1.05 (1.37)	◉0.87 (1.14) ◉1.20 (1.57)	▣0.75 (0.98)	★0.52 (0.68)

Capacity m^3 (yd^3)		Width mm (in)		Weight kg (lb)	Recommendation mm (ft·in)				
					5,680 (18' 8") Boom				8,200 (26' 11") Boom
SAE heaped	CECE heaped	Without sidecutters	With sidecutters		2,000 (6' 7") Arm	2,400 (7' 10") Arm	2,920 (9' 7") Arm	3,900 (12' 10") Arm	6,300 (20' 8") Arm
0.51 (0.67)	0.45 (0.59)	700 (27.6)	820 (32.3)	570 (1,260)	●	●	●	●	–
0.80 (1.05)	0.70 (0.92)	1,000 (39.4)	1,120 (44.1)	700 (1,540)	●	●	●	●	–
0.92 (1.20)	0.80 (1.05)	1,150 (45.3)	1,270 (50.0)	770 (1,700)	●	●	●	■	–
1.10 (1.44)	0.96 (1.26)	1,320 (52.0)	1,440 (56.7)	830 (1,830)	●	●	■	▲	–
1.20 (1.57)	1.00 (1.31)	1,400 (55.1)	1,520 (59.8)	850 (1,870)	●	■	▲	▲	–
1.34 (1.75)	1.15 (1.50)	1,550 (61.0)	1,670 (65.7)	920 (2,030)	■	■	▲	–	–
◈ 0.74 (0.97)	0.65 (0.85)	985 (38.8)	-	770 (1,700)	●	●	●	●	–
◈ 0.90 (1.18)	0.80 (1.05)	1,070 (42.1)	-	810 (1,790)	●	●	●	■	–
◈ 1.05 (1.37)	0.92 (1.20)	1,290 (50.8)	-	890 (1,960)	●	●	■	▲	–
◉ 0.87 (1.14)	0.75 (0.98)	1,140 (44.9)	-	900 (1,980)	●	●	●	■	–
◉ 1.20 (1.57)	1.00 (1.31)	1,410 (55.5)	-	1,030 (2,270)	■	▲	–	–	–
▣ 0.75 (0.98)	0.65 (0.85)	1,790 (70.5)	-	880 (1,940)	●	●	■	▲	–
★ 0.52 (0.68)	0.45 (0.59)	935 (36.8)	1,035 (40.7)	460 (1,010)	–	–	–	–	■

◈ Heavy duty bucket
◉ Rock-Heavy duty bucket
▣ Slope finishing bucket
★ Long reach bucket

● : Applicable for materials with density of 2,000 kg /m^3 (3,370 lb/ yd^3) or less
■ : Applicable for materials with density of 1,600 kg /m^3 (2,700 lb/ yd^3) or less
▲ : Applicable for materials with density of 1,100 kg /m^3 (1,850 lb/ yd^3) or less

ATTACHMENT

Booms and arms are welded with a low-stress, full-box section design. 5.68m & 8.2m Booms and 2.0m, 2.4m, 2.92m, 3.9m & 6.3m Arms are available.

DIGGING FORCE

Boom	Length	mm (ft·in)	5,680 (18' 8")				8,200 (26' 11")	Remarks
	Weight	kg (lb)	1,950 (4,300)				2,350 (5,180)	
Arm	Length	mm (ft·in)	2,000 (6' 7")	2,400 (7' 10")	2,920 (9' 7")	3,900 (12' 10")	6,300 (20' 8")	
	Weight	kg (lb)	975 (2,150)	1,045 (2,300)	1,095 (2,410)	1,295 (2,850)	1,330 (2,930)	
Bucket digging force	SAE	kN	133.4 [144.8]	133.4 [144.8]	133.4 [144.8]	133.4 [144.8]	72.6	[ ]: Power Boost
		kgf	13600 [14770]	13600 [14770]	13600 [14770]	13600 [14770]	7400	
		lbf	29980 [32550]	29980 [32550]	29980 [32550]	29980 [32550]	16310	
	ISO	kN	152.0 [165.0]	152.0 [165.0]	152.0 [165.0]	152.0 [165.0]	83.4	
		kgf	15500 [16830]	15500 [16830]	15500 [16830]	15500 [16830]	8500	
		lbf	34170 [37100]	34170 [37100]	34170 [37100]	34170 [37100]	18740	
Arm crowd force	SAE	kN	144.2 [156.5]	119.6 [129.9]	102.0 [110.7]	84.3 [91.6]	49.0	
		kgf	14700 [15960]	12200 [13250]	10400 [11290]	8600 [9340]	5000	
		lbf	32410 [35190]	26900 [29210]	22930 [24900]	18960 [20590]	11020	
	ISO	kN	151.0 [164.0]	125.5 [136.3]	106.9 [116.1]	87.3 [94.8]	50.0	
		kgf	15400 [16720]	12800 [13900]	10900 [11830]	8900 [9660]	5100	
		lbf	33950 [36860]	28220 [30640]	24030 [26090]	19620 [21300]	11240	

Note: Boom weight includes arm cylinder, piping, and pin
Arm weight includes bucket cylinder, linkage, and pin

Dimensions & Working Range

R210LC-9 DIMENSIONS

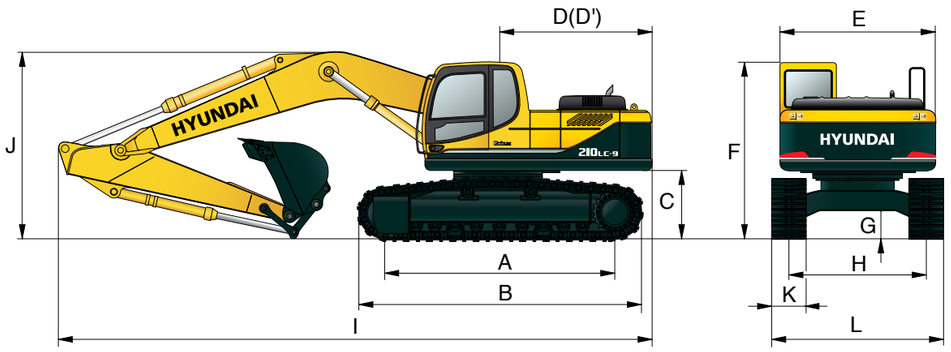

Unit : mm (ft · in)

A	Tumbler distance	3,650 (11′ 12″)
B	Overall length of crawler	4,440 (14′ 7″)
C	Ground clearance of counterweight	1,060 (3′ 6″)
D	Tail swing radius	2,840 (9′ 4″)
D′	Rear-end length	2,770 (9′ 1″)
E	Overall width of upperstructure	2,740 (8′ 12″)
F	Overall height of cab	2,920 (9′ 7″)
G	Min. ground clearance	480 (1′ 7″)
H	Track gauge	2,390 (7′ 10″)

	Boom length	5,680 (18′ 8″)				8,200 (26′ 11″)
	Arm length	2,000 (6′ 7″)	2,400 (7′ 10″)	2,920 (9′ 7″)	3,900 (12′ 10″)	6,300 (20′ 8″)
I	Overall length	9,650 (31′ 8″)	9,570 (31′ 5″)	9,530 (31′ 3″)	9,520 (31′ 3″)	12,030 (39′ 6″)
J	Overall height of boom	3,200 (10′ 6″)	3,110 (10′ 2″)	3,030 (9′ 11″)	3,480 (11′ 5″)	3,280 (10′ 9″)

K	Track shoe width	600 (24″)	700 (28″)	800 (32″)	900 (36″)
L	Overall width	2,990 (9′ 10″)	3,090 (10′ 2″)	3,190 (10′ 6″)	3,290 (10′ 10″)

R210LC-9 WORKING RANGE

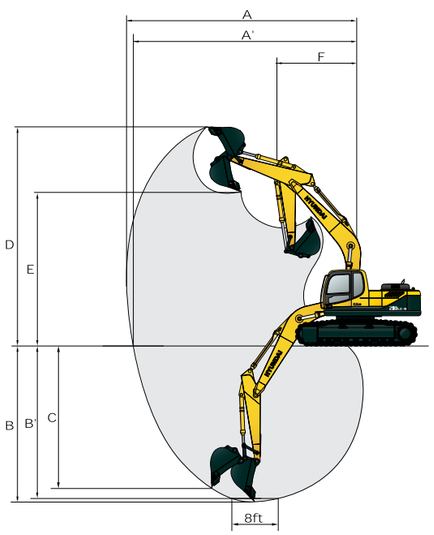

Unit : mm (ft · in)

	Boom length	5,680 (18′ 8″)				8,200 (26′ 11″)
	Arm length	2,000 (6′ 7″)	2,400 (7′ 10″)	2,920 (9′ 7″)	3,900 (12′ 10″)	6,300 (20′ 8″)
A	Max. digging reach	9,140 (29′ 12″)	9,500 (31′ 2″)	9,980 (32′ 9″)	10,910 (35′10″)	15,220 (49′ 11″)
A′	Max. digging reach on ground	8,960 (29′ 5″)	9,330 (30′ 7″)	9,820 (32′ 3″)	10,770 (35′ 4″)	15,120 (49′ 7″)
B	Max. digging depth	5,820 (19′ 1″)	6,220 (20′ 5″)	6,730 (22′ 1″)	7,720 (25′ 4″)	11,760 (38′ 7″)
B′	Max. digging depth (8' level)	5,580 (18′ 4″)	6,010 (19′ 9″)	6,560 (21′ 6″)	7,580 (24′ 10″)	11,650 (38′ 3″)
C	Max. vertical wall digging depth	5,280 (17′ 4″)	5,720 (18′ 9″)	6,280 (20′ 7″)	7,240 (23′ 9″)	9,610 (31′ 6″)
D	Max. digging height	9,140 (29′ 12″)	9,340 (30′ 8″)	9,600 (31′ 6″)	10,110 (33′ 2″)	12,550 (41′ 2″)
E	Max. dumping height	6,330 (20′ 9″)	6,520 (21′ 5″)	6,780 (22′ 3″)	7,290 (23′ 11″)	10,280 (33′ 9″)
F	Min. swing radius	3,750 (12′ 4″)	3,740 (12′ 3″)	3,740 (12′ 3″)	3,650 (11′ 12″)	4,870 (15′ 12″)

Dimensions & Working Range

R210LC-9 HIGH WALKER DIMENSIONS

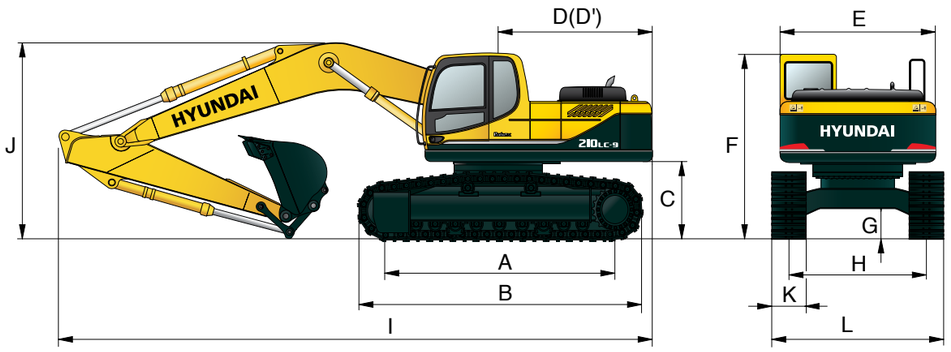

Unit : mm (ft · in)

A	Tumbler distance	3,650 (11′ 12″)
B	Overall length of crawler	4,440 (14′ 7″)
C	Ground clearance of counterweight	1,240 (4′ 1″)
D	Tail swing radius	2,840 (9′ 4″)
D′	Rear-end length	2,770 (9′ 1″)
E	Overall width of upperstructure	2,740 (8′ 12″)
F	Overall height of cab	3,100 (10′ 2″)
G	Min. ground clearance	660 (2′ 2″)
H	Track gauge	2,795 (9′ 2″)

	Boom length	5,680 (18′ 8″)			
	Arm length	2,000 (6′ 7″)	2,400 (7′ 10″)	2,920 (9′ 7″)	3,900 (12′ 10″)
I	Overall length	9,650 (31′ 8″)	9,550 (31′ 4″)	9,470 (31′ 1″)	9,560 (31′ 4″)
J	Overall height of boom	3,290 (10′ 10″)	3,170 (10′ 5″)	3,060 (10′ 0″)	3,450 (11′ 4″)

K	Track shoe width	Type	Triple grouser			Double grouser
		Width	600 (24″)	700 (28″)	800 (32″)	710 (28″)
L	Overall width		3,395 (11′ 2″)	3,495 (11′ 6″)	3,595 (11′ 10″)	3,505 (11′ 6″)

R210LC-9 HIGH WALKER WORKING RANGE

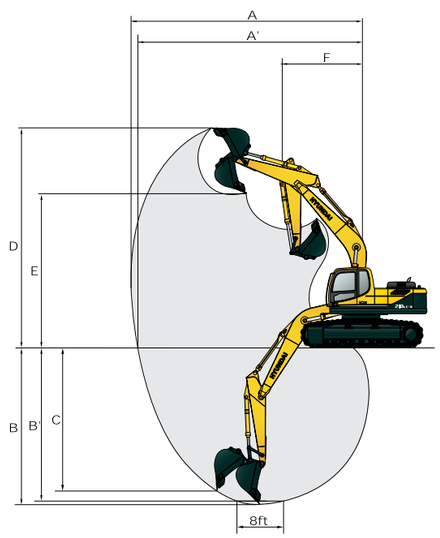

Unit : mm (ft · in)

	Boom length	5,680 (18′ 8″)			
	Arm length	2,000 (6′ 7″)	2,400 (7′ 10″)	2,920 (9′ 7″)	3,900 (12′ 10″)
A	Max. digging reach	9,140 (29′ 12″)	9,500 (31′ 2″)	9,980 (32′ 9″)	10,910 (35′ 10″)
A′	Max. digging reach on ground	8,920 (29′ 3″)	9,290 (30′ 6″)	9,820 (32′ 3″)	10,730 (35′ 2″)
B	Max. digging depth	5,630 (18′ 6″)	6,010 (19′ 9″)	6,550 (21′ 6″)	7,530 (24′ 8″)
B′	Max. digging depth (8' level)	5,390 (17′ 8″)	5,820 (19′ 1″)	6,380 (20′ 11″)	7,390 (24′ 3″)
C	Max. vertical wall digging depth	5,090 (16′ 8″)	5,630 (18′ 6″)	6,100 (20′ 0″)	7,050 (23′ 2″)
D	Max. digging height	9,330 (30′ 7″)	9,530 (31′ 3″)	9,780 (32′ 1″)	10,300 (33′ 10″)
E	Max. dumping height	6,520 (21′ 5″)	6,710 (22′ 0″)	6,960 (22′ 10″)	7,480 (24′ 6″)
F	Min. swing radius	3,750 (12′ 4″)	3,740 (12′ 3″)	3,740 (12′ 3″)	3,650 (11′ 12″)

Lifting Capacity

R210LC-9

Rating over-front Rating over-side or 360 degree

Boom : 5.68m (18′ 8″) / Arm : 2.0 m (6′ 7″) / Bucket : 0.92 m³ (1.20 yd³) SAE heaped / Shoe : 600mm (24″) triple grouser

Load point height m (ft)		Load radius 3.0 m (10 ft)		4.5 m (15 ft)		6.0 m (20 ft)		7.5 m (25 ft)		At max. reach Capacity		Reach
												m (ft)
7.5 m	kg									*4010	*4010	6.65
(25 ft)	lb									*8840	*8840	(21.8)
6.0 m	kg					*4440	*4440			*4060	3040	7.78
(20 ft)	lb					*9790	*9790			*8950	6700	(25.5)
4.5 m	kg			*5730	*5730	*4860	4630			*4190	2540	8.43
(15 ft)	lb			*12630	*12630	*10710	10210			*9240	5600	(27.7)
3.0 m	kg			*7460	6840	*5610	4370	*4830	3000	4040	2310	8.74
(10 ft)	lb			*16450	15080	*12370	9630	*10650	6610	8910	5090	(28.7)
1.5 m	kg			*8990	6320	*6390	4120	5060	2890	3990	2260	8.73
(5 ft)	lb			*19820	13930	*14090	9080	11160	6370	8800	4980	(28.6)
Ground	kg			*9690	6090	*6910	3950	4980	2810	4200	2380	8.42
Line	lb			*21360	13430	*15230	8710	10980	6190	9260	5250	(27.6)
-1.5 m	kg	*13990	12260	*9630	6070	*6990	3910			4820	2750	7.76
(-5 ft)	lb	*30840	27030	*21230	13380	*15410	8620			10630	6060	(25.5)
-3.0 m	kg	*12500	12500	*8820	6180	*6350	3990			*4850	3650	6.61
(-10 ft)	lb	*27560	27560	*19440	13620	*14000	8800			*10690	8050	(21.7)
-4.5 m	kg	*9460	*9460									
(-15 ft)	lb	*20860	*20860									

Boom : 5.68m (18′ 8″) / Arm : 2.40 m (7′ 10″) / Bucket : 0.92 m³ (1.20 yd³) SAE heaped / Shoe : 600mm (24″) triple grouser

Load point height m (ft)		Load radius 1.5 m (5 ft)		3.0 m (10 ft)		4.5 m (15 ft)		6.0 m (20 ft)		7.5 m (25 ft)		At max. reach Capacity		Reach
														m (ft)
7.5 m	kg											*3700	3640	7.15
(25 ft)	lb											*8160	8020	(23.5)
6.0 m	kg							*4010	*4010			*3780	2760	8.20
(20 ft)	lb							*8840	*8840			*8330	6080	(26.9)
4.5 m	kg							*4490	*4490	*4230	3130	*3900	2340	8.82
(15 ft)	lb							*9900	*9900	*9330	6900	*8600	5160	(28.9)
3.0 m	kg					*6900	*6900	*5280	4400	*4560	3010	3760	2130	9.11
(10 ft)	lb					*15210	*15210	*11640	9700	*10050	6640	8290	4700	(29.9)
1.5 m	kg					*8560	6380	*6120	4130	*4970	2880	3710	2080	9.10
(5 ft)	lb					*18870	14070	*13490	9110	*10960	6350	8180	4590	(29.9)
Ground	kg			*8790	*8790	*9490	6080	*6740	3930	4950	2780	3890	2180	8.81
Line	lb			*19380	*19380	*20920	13400	*14860	8660	10910	6130	8580	4810	(28.9)
-1.5 m	kg	*9760	*9760	*13510	12060	*9650	6000	*6960	3850			4390	2480	8.18
(-5 ft)	lb	*21520	*21520	*29780	26590	*21270	13230	*15340	8490			9680	5470	(26.8)
-3.0 m	kg	*14150	*14150	*13240	12280	*9090	6080	*6590	3900			*4700	3190	7.12
(-10 ft)	lb	*31200	*31200	*29190	27070	*20040	13400	*14530	8600			*10360	7030	(23.4)
-4.5 m	kg			*10630	*10630	*7400	6330							
(-15 ft)	lb			*23440	*23440	*16310	13960							

Boom : 5.68m (18′ 8″) / Arm : 2.92 m (9′ 7″) / Bucket : 0.92 m³ (1.20 yd³) SAE heaped / Shoe : 600mm (24″) triple grouser

Load point height m (ft)		Load radius 1.5 m (5 ft)		3.0 m (10 ft)		4.5 m (15 ft)		6.0 m (20 ft)		7.5 m (25 ft)		At max. reach Capacity		Reach
														m (ft)
7.5 m	kg											*3360	3150	7.78
(25 ft)	lb											*7410	6940	(25.5)
6.0 m	kg									*2340	*2340	*3450	2460	8.74
(20 ft)	lb									*5160	*5160	*7610	5420	(28.7)
4.5 m	kg							*4010	*4010	*3830	3180	*3580	2100	9.32
(15 ft)	lb							*8840	*8840	*8440	7010	*7890	4630	(30.6)
3.0 m	kg			*9780	*9780	*6150	*6150	*4840	4460	*4230	3040	3440	1930	9.59
(10 ft)	lb			*21560	*21560	*13560	*13560	*10670	9830	*9330	6700	7580	4250	(31.5)
1.5 m	kg			*8810	*8810	*7960	6490	*5750	4160	*4710	2880	3390	1880	9.59
(5 ft)	lb			*19420	*19420	*17550	14310	*12680	9170	*10380	6350	7470	4140	(31.5)
Ground	kg			*9550	*9550	*9160	6090	*6490	3920	4930	2750	3520	1950	9.31
Line	lb			*21050	*21050	*20190	13430	*14310	8640	10870	6060	7760	4300	(30.5)
-1.5 m	kg	*8810	*8810	*12610	11870	*9600	5940	*6870	3800	4860	2690	3920	2190	8.72
(-5 ft)	lb	*19420	*19420	*27800	26170	*21160	13100	*15150	8380	10710	5930	8640	4830	(28.6)
-3.0 m	kg	*12190	*12190	*13980	12040	*9320	5960	*6740	3800			*4460	2710	7.75
(-10 ft)	lb	*26870	*26870	*30820	26540	*20550	13140	*14860	8380			*9830	5970	(25.4)
-4.5 m	kg			*11860	*11860	*8120	6140					*4330	4080	6.16
(-15 ft)	lb			*26150	*26150	*17900	13540					*9550	8990	(20.2)

1. Lifting capacity is based on SAE J1097, ISO 10567.
2. Lifting capacity of the Robex Series does not exceed 75% of the tipping load with the machine on firm, level ground or 87% of full hydraulic capacity.
3. The load point is a hook located on the back of the bucket.
4. (*) indicates the load limited by hydraulic capacity.

Lifting Capacity

R210LC-9

Rating over-front Rating over-side or 360 degree

Boom : 5.68m (18′ 8″) / Arm : 3.90 m (12′ 10″) / Bucket : 0.92 m³ (1.20 yd³) SAE heaped / Shoe : 600mm (24″) triple grouser

Load point height m (ft)		Load radius 1.5 m (5 ft)		3.0 m (10 ft)		4.5 m (15 ft)		6.0 m (20 ft)		7.5 m (25 ft)		9.0 m (30 ft)		At max. reach Capacity		Reach
																m (ft)
9.0 m	kg													*2740	*2740	7.66
(30 ft)	lb													*6040	*6040	(25.1)
7.5 m	kg									*1980	*1980			*2800	2420	8.94
(25 ft)	lb									*4370	*4370			*6170	5340	(29.3)
6.0 m	kg									*2840	*2840			*2900	1960	9.77
(20 ft)	lb									*6260	*6260			*6390	4320	(32.1)
4.5 m	kg									*3090	*3090	*2040	*2040	*3020	1700	10.28
(15 ft)	lb									*6810	*6810	*4500	*4500	*6660	3750	(33.7)
3.0 m	kg							*3940	*3940	*3560	3080	*2910	2140	2890	1560	10.52
(10 ft)	lb							*8690	*8690	*7850	6790	*6420	4720	6370	3440	(34.5)
1.5 m	kg			*11130	*11130	*6640	*6640	*4950	4220	*4120	2880	*3450	2040	2840	1510	10.52
(5 ft)	lb			*24540	*24540	*14640	*14640	*10910	9300	*9080	6350	*7610	4500	6260	3330	(34.5)
Ground	kg	*5260	*5260	*10600	*10600	*8250	6130	*5860	3910	*4650	2710	*3530	1950	2930	1550	10.27
Line	lb	*11600	*11600	*23370	*23370	*18190	13510	*12920	8620	*10250	5970	*7780	4300	6460	3420	(33.7)
-1.5 m	kg	*7500	*7500	*11650	11540	*9150	5810	*6490	3700	4750	2590	*2370	1900	3180	1700	9.75
(-5 ft)	lb	*16530	*16530	*25680	25440	*20170	12810	*14310	8160	10470	5710	*5220	4190	7010	3750	(32.0)
-3.0 m	kg	*9990	*9990	*14350	11540	*9360	5720	*6700	3620	4710	2550			3710	2030	8.91
(-10 ft)	lb	*22020	*22020	*31640	25440	*20640	12610	*14770	7980	10380	5620			8180	4480	(29.2)
-4.5 m	kg	*12960	*12960	*13360	11780	*8830	5800	*6340	3670					*4030	2730	7.62
(-15 ft)	lb	*28570	*28570	*29450	25970	*19470	12790	*13980	8090					*8880	6020	(25.0)
-6.0 m	kg			*10610	*10610	*7100	6080									
(-20 ft)	lb			*23390	*23390	*15650	13400									

R210LC-9 HIGH WALKER

Rating over-front Rating over-side or 360 degree

Boom : 5.68m (18′ 8″) / Arm : 2.40 m (7′ 10″) / Bucket : 0.92 m³ (1.20 yd³) SAE heaped / Shoe : 600mm (24″) triple grouser

Load point height m (ft)		Load radius 1.5 m (5 ft)		3.0 m (10 ft)		4.5 m (15 ft)		6.0 m (20 ft)		7.5 m (25 ft)		At max. reach Capacity		Reach
														m (ft)
7.5 m	kg											*3700	*3700	7.31
(25 ft)	lb											*8160	*8160	(24.0)
6.0 m	kg									*4050	*4050			*3790	3480	8.30
(20 ft)	lb									*8930	*8930			*8360	7670	(27.2)
4.5 m	kg							*5360	*5360	*4580	*4580	*4260	4030	*3920	3020	8.87
(15 ft)	lb							*11820	*11820	*10100	*10100	*9390	8880	*8640	6660	(29.1)
3.0 m	kg							*7130	*7130	*5390	*5390	*4610	3900	4010	2810	9.12
(10 ft)	lb							*15720	*15720	*11880	*11880	*10160	8600	8840	6190	(29.9)
1.5 m	kg							*8720	8370	*6220	5360	*5020	3770	3990	2780	9.08
(5 ft)	lb							*19220	18450	*13710	11820	*11070	8310	8800	6130	(29.8)
Ground	kg			*9350	*9350	*9550	8080	*6790	5170	5290	3670			4210	2940	8.75
Line	lb			*20610	*20610	*21050	17810	*14970	11400	11660	8090			9280	6480	(28.7)
-1.5 m	kg	*10290	*10290	*14180	*14180	*9620	8020	*6950	5100					*4650	3360	8.07
(-5 ft)	lb	*22690	*22690	*31260	*31260	*21210	17680	*15320	11240					*10250	7410	(26.5)
-3.0 m	kg	*14760	*14760	*12990	*12990	*8950	8120	*6470	5170					*4690	4350	6.94
(-10 ft)	lb	*32540	*32540	*28640	*28640	*19730	17900	*14260	11400					*10340	9590	(22.8)
-4.5 m	kg			*10150	*10150	*7020	*7020									
(-15 ft)	lb			*22380	*22380	*15480	*15480									

Boom : 5.68m (18′ 8″) / Arm : 2.92 m (9′ 7″) / Bucket : 0.92 m³ (1.20 yd³) SAE heaped / Shoe : 600mm (24″) triple grouser

Load point height m (ft)		Load radius 1.5 m (5 ft)		3.0 m (10 ft)		4.5 m (15 ft)		6.0 m (20 ft)		7.5 m (25 ft)		At max. reach Capacity		Reach
														m (ft)
7.5 m	kg											*3370	*3370	7.93
(25 ft)	lb											*7430	*7430	(26.0)
6.0 m	kg											*3460	3130	8.83
(20 ft)	lb											*7630	6900	(29.0)
4.5 m	kg									*4110	*4110	*3870	*3870	*3600	2740	9.37
(15 ft)	lb									*9060	*9060	*8530	*8530	*7940	6040	(30.7)
3.0 m	kg					*10440	*10440	*6400	*6400	*4960	*4960	*4290	3930	3680	2560	9.60
(10 ft)	lb					*23020	*23020	*14110	*14110	*10930	*10930	*9460	8660	8110	5640	(31.5)
1.5 m	kg					*8610	*8610	*8150	*8150	*5860	5380	*4760	3770	3650	2530	9.57
(5 ft)	lb					*18980	*18980	*17970	*17970	*12920	11860	*10490	8310	8050	5580	(31.4)
Ground	kg					*9870	*9870	*9260	8080	*6560	5150	*5150	3640	3820	2650	9.25
Line	lb					*21760	*21760	*20410	17810	*14460	11350	*11350	8020	8420	5840	(30.3)
-1.5 m	kg	*9210	*9210	*13090	*13090	*9600	7940	*6880	5040	5200	3590			4280	2980	8.62
(-5 ft)	lb	*20300	*20300	*28860	*28860	*21160	17500	*15170	11110	11460	7910			9440	6570	(28.3)
-3.0 m	kg	*12660	*12660	*13780	*13780	*9230	7990	*6670	5060					*4470	3710	7.59
(-10 ft)	lb	*27910	*27910	*30380	*30380	*20350	17610	*14700	11160					*9850	8180	(24.9)
-4.5 m	kg			*11470	*11470	*7860	*7860							*4250	*4250	5.89
(-15 ft)	lb			*25290	*25290	*17330	*17330							*9370	*9370	(19.3)

Lifting Capacity

R210LC-9 HIGH WALKER

Rating over-front Rating over-side or 360 degree

Boom : 5.68m (18′ 8″) / Arm : 3.90 m (12′ 10″) / Bucket : 0.92 m³ (1.20 yd³) SAE heaped / Shoe : 600mm (24″) triple grouser

Load point height m (ft)		Load radius												At max. reach		
		1.5 m (5 ft)		3.0 m (10 ft)		4.5 m (15 ft)		6.0 m (20 ft)		7.5 m (25 ft)		9.0 m (30 ft)		Capacity		Reach
																m (ft)
9.0 m	kg													*2750	*2750	7.86
(30 ft)	lb													*6060	*6060	(25.8)
7.5 m	kg									*2220	*2220			*2810	*2810	9.06
(25 ft)	lb									*4890	*4890			*6190	*6190	(29.7)
6.0 m	kg									*2850	*2850			*2910	2550	9.85
(20 ft)	lb									*6280	*6280			*6420	5620	(32.3)
4.5 m	kg									*3140	*3140	*2180	*2180	*3030	2270	10.33
(15 ft)	lb									*6920	*6920	*4810	*4810	*6680	5000	(33.9)
3.0 m	kg							*4060	*4060	*3620	*3620	*2990	2840	3100	2120	10.54
(10 ft)	lb							*8950	*8950	*7980	*7980	*6590	6260	6830	4670	(34.6)
1.5 m	kg			*11630	*11630	*6880	*6880	*5070	*5070	*4190	3770	*3490	2730	3070	2090	10.50
(5 ft)	lb			*25640	*25640	*15170	*15170	*11180	*11180	*9240	8310	*7690	6020	6770	4610	(34.4)
Ground	kg	*5540	*5540	*10590	*10590	*8400	8100	*5960	5130	*4710	3590	*3480	2640	3180	2160	10.22
Line	lb	*12210	*12210	*23350	*23350	*18520	17860	*13140	11310	*10380	7910	*7670	5820	7010	4760	(33.5)
-1.5 m	kg	*7800	*7800	*11920	*11920	*9220	7800	*6540	4940	*5060	3480			3480	2370	9.67
(-5 ft)	lb	*17200	*17200	*26280	*26280	*20330	17200	*14420	10890	*11160	7670			7670	5220	(31.7)
-3.0 m	kg	*10330	*10330	*14530	*14530	*9340	7730	*6690	4870	5060	3450			*3920	2820	8.78
(-10 ft)	lb	*22770	*22770	*32030	*32030	*20590	17040	*14750	10740	11160	7610			*8640	6220	(28.8)
-4.5 m	kg	*13390	*13390	*13120	*13120	*8690	7840	*6230	4940					*4030	3800	7.41
(-15 ft)	lb	*29520	*29520	*28920	*28920	*19160	17280	*13730	10890					*8880	8380	(24.3)
-6.0 m	kg			*10090	*10090	*6720	*6720									
(-20 ft)	lb			*22240	*22240	*14820	*14820									

Boom : 5.68m (18′ 8″) / Arm : 2.40 m (7′ 10″) / Bucket : 0.92 m³ (1.20 yd³) SAE heaped / Shoe : 800mm (32″) triple grouser

Load point height m (ft)		Load radius										At max. reach		
		1.5 m (5 ft)		3.0 m (10 ft)		4.5 m (15 ft)		6.0 m (20 ft)		7.5 m (25 ft)		Capacity		Reach
														m (ft)
7.5 m	kg											*3700	*3700	7.31
(25 ft)	lb											*8160	*8160	(24.0)
6.0 m	kg							*4050	*4050			*3790	3570	8.30
(20 ft)	lb							*8930	*8930			*8360	7870	(27.2)
4.5 m	kg					*5360	*5360	*4580	*4580	*4260	4130	*3920	3110	8.87
(15 ft)	lb					*11820	*11820	*10100	*10100	*9390	9110	*8640	6860	(29.1)
3.0 m	kg					*7130	*7130	*5390	*5390	*4610	4010	*4080	2890	9.12
(10 ft)	lb					*15720	*15720	*11880	*11880	*10160	8840	*8990	6370	(29.9)
1.5 m	kg					*8720	8580	*6220	5500	*5020	3870	4110	2860	9.08
(5 ft)	lb					*19220	18920	*13710	12130	*11070	8530	9060	6310	(29.8)
Ground	kg			*9350	*9350	*9550	8290	*6790	5310	*5320	3780	4340	3020	8.75
Line	lb			*20610	*20610	*21050	18280	*14970	11710	*11730	8330	9570	6660	(28.7)
-1.5 m	kg	*10290	*10290	*14180	*14180	*9620	8230	*6950	5240			*4650	3450	8.07
(-5 ft)	lb	*22690	*22690	*31260	*31260	*21210	18140	*15320	11550			*10250	7610	(26.5)
-3.0 m	kg	*14760	*14760	*12990	*12990	*8950	8330	*6470	5310			*4690	4470	6.94
(-10 ft)	lb	*32540	*32540	*28640	*28640	*19730	18360	*14260	11710			*10340	9850	(22.8)
-4.5 m	kg			*10150	*10150	*7020	*7020							
(-15 ft)	lb			*22380	*22380	*15480	*15480							

Boom : 5.68m (18′ 8″) / Arm : 2.92 m (9′ 7″) / Bucket : 0.92 m³ (1.20 yd³) SAE heaped / Shoe : 800mm (32″) triple grouser

Load point height m (ft)		Load radius										At max. reach		
		1.5 m (5 ft)		3.0 m (10 ft)		4.5 m (15 ft)		6.0 m (20 ft)		7.5 m (25 ft)		Capacity		Reach
														m (ft)
7.5 m	kg											*3370	*3370	7.93
(25 ft)	lb											*7430	*7430	(26.0)
6.0 m	kg									*2700	*2700	*3460	3220	8.83
(20 ft)	lb									*5950	*5950	*7630	7100	(29.0)
4.5 m	kg							*4110	*4110	*3870	*3870	*3600	2820	9.37
(15 ft)	lb							*9060	*9060	*8530	*8530	*7940	6220	(30.7)
3.0 m	kg			*10440	*10440	*6440	*6440	*4960	*4960	*4290	4030	*3760	2640	9.60
(10 ft)	lb			*23020	*23020	*14110	*14110	*10930	*10930	*9460	8880	*8290	5820	(31.5)
1.5 m	kg			*8610	*8610	*8150	*8150	*5860	5520	*4760	3870	3760	2610	9.57
(5 ft)	lb			*18980	*18980	*17970	*17970	*12920	12170	*10490	8530	8290	5750	(31.4)
Ground	kg			*9870	*9870	*9260	8290	*6560	5300	*5150	3750	3940	2730	9.25
Line	lb			*21760	*21760	*20410	18280	*14460	11680	*11350	8270	8690	6020	(30.3)
-1.5 m	kg	*9210	*9210	*13090	*13090	*9600	8150	*6880	5180	*5300	3690	*4340	3060	8.62
(-5 ft)	lb	*20300	*20300	*28860	*28860	*21160	17970	*15170	11420	*11680	8140	*9570	6750	(28.3)
-3.0 m	kg	*12660	*12660	*13780	*13780	*9230	8200	*6670	5200			*4470	3810	7.59
(-10 ft)	lb	*27910	*27910	*30380	*30380	*20350	18080	*14700	11460			*9850	8400	(24.9)
-4.5 m	kg			*11470	*11470	*7860	*7860					*4250	*4250	5.89
(-15 ft)	lb			*25290	*25290	*17330	*17330					*9370	*9370	(19.3)

1. Lifting capacity is based on SAE J1097, ISO 10567.
2. Lifting capacity of the Robex Series does not exceed 75% of the tipping load with the machine on firm, level ground or 87% of full hydraulic capacity.
3. The load point is a hook located on the back of the bucket.
4. (*) indicates the load limited by hydraulic capacity.

Lifting Capacity

R210LC-9 HIGH WALKER

Rating over-front Rating over-side or 360 degree

Boom : 5.68m (18′ 8″) / Arm : 3.90 m (12′ 10″) / Bucket : 0.92 m³ (1.20 yd³) SAE heaped / Shoe : 800mm (32″) triple grouser

Load point height m (ft)		Load radius												At max. reach		
		1.5 m (5 ft)		3.0 m (10 ft)		4.5 m (15 ft)		6.0 m (20 ft)		7.5 m (25 ft)		9.0 m (30 ft)		Capacity		Reach
																m (ft)
9.0 m	kg													*2750	*2750	7.86
(30 ft)	lb													*6060	*6060	(25.8)
7.5 m	kg									*2220	*2220			*2810	*2810	9.06
(25 ft)	lb									*4890	*4890			*6190	*6190	(29.7)
6.0 m	kg									*2850	*2850			*2910	2620	9.85
(20 ft)	lb									*6280	*6280			*6420	5780	(32.3)
4.5 m	kg									*3140	*3140	*2180	*2180	*3030	2340	10.33
(15 ft)	lb									*6920	*6920	*4810	*4810	*6680	5160	(33.9)
3.0 m	kg							*4060	*4060	*3620	*3620	*2990	2920	*3180	2190	10.54
(10 ft)	lb							*8950	*8950	*7980	*7980	*6590	6440	*7010	4830	(34.6)
1.5 m	kg			*11630	*11630	*6880	*6880	*5070	*5070	*4190	3870	*3490	2820	3170	2160	10.50
(5 ft)	lb			*25640	*25640	*15170	*15170	*11180	*11180	*9240	8530	*7690	6220	6990	4760	(34.4)
Ground	kg	*5540	*5540	*10590	*10590	*8400	8310	*5960	5270	*4710	3700	*3480	2730	3280	2230	10.22
Line	lb	*12210	*12210	*23350	*23350	*18520	18320	*13140	11620	*10380	8160	*7670	6020	7230	4920	(33.5)
-1.5 m	kg	*7800	*7800	*11920	*11920	*9220	8010	*6540	5080	*5060	3580			3590	2450	9.67
(-5 ft)	lb	*17200	*17200	*26280	*26280	*20330	17660	*14420	11200	*11160	7890			7910	5400	(31.7)
-3.0 m	kg	*10330	*10330	*14530	*14530	*9340	7940	*6690	5010	*5090	3550			*3920	2900	8.78
(-10 ft)	lb	*22770	*22770	*32030	*32030	*20590	17500	*14750	11050	*11220	7830			*8640	6390	(28.8)
-4.5 m	kg	*13390	*13390	*13120	*13120	*8690	8050	*6230	5080					*4030	3910	7.41
(-15 ft)	lb	*29520	*29520	*28920	*28920	*19160	17750	*13730	11200					*8880	8620	(24.3)
-6.0 m	kg			*10090	*10090	*6720	*6720									
(-20 ft)	lb			*22240	*22240	*14820	*14820									

R210LC-9 LONG REACH

Rating over-front Rating over-side or 360 degree

Boom : 8.2m (26′ 11″) / Arm : 6.3 m (20′ 8″) / Bucket : 0.52 m³ (0.68 yd³) SAE heaped / Shoe : 800mm (32″) triple grouser

Load point height m (ft)		Load radius														At max. reach		
		4.5 m (15 ft)		6.0 m (20 ft)		7.5 m (25 ft)		9.0 m (30 ft)		10.5 m (35 ft)		12.0 m (40 ft)		13.5 m (45 ft)		Capacity		Reach
																		m (ft)
10.5 m	kg															*1480	*1480	12.11
(35 ft)	lb															*3260	*3260	(39.7)
9.0 m	kg											*930	*930			*1510	*1510	13.11
(30 ft)	lb											*2050	*2050			*3330	*3330	(43.0)
7.5 m	kg											*1550	*1550			*1550	1320	13.84
(25 ft)	lb											*3420	*3420			*3420	2910	(45.4)
6.0 m	kg									*1600	*1600	*1610	*1610			*1600	1160	14.37
(20 ft)	lb									*3530	*3530	*3550	*3550			* 3530	2560	(47.1)
4.5 m	kg									*1790	*1790	*1730	1720	*1260	*1260	*1660	1050	14.72
(15 ft)	lb									*3950	*3950	*3810	3790	*2780	*2780	*3660	2310	(48.3)
3.0 m	kg					*2520	*2520	*2220	*2220	*2020	*2020	*1880	1630	*1590	1220	*1720	980	14.89
(10 ft)	lb					*5560	*5560	*4890	*4890	*4450	*4450	*4140	3590	*3510	2690	*3790	2160	(48.9)
1.5 m	kg	*5620	*5620	*3940	*3940	*3090	*3090	*2590	*2590	*2270	2000	*2050	1530	*1790	1170	*1800	940	14.90
(5 ft)	lb	*12390	*12390	*8690	*8690	*6810	*6810	*5710	*5710	*5000	4410	*4520	3370	*3950	2580	*3970	2070	(48.9)
Ground	kg	*6990	6720	*4770	4490	*3620	3240	*2950	2430	*2510	1860	*2220	1440	*1820	1110	1880	930	14.75
Line	lb	*15410	14820	*10520	9900	*7980	7140	*6500	5360	*5530	4100	*4890	3170	*4010	2450	4140	2050	(48.4)
-1.5 m	kg	*7830	6210	*5390	4120	*4060	2990	*3260	2260	*2740	1740	*2380	1360	*1570	1070	1930	960	14.42
(-5 ft)	lb	*17260	13690	*11880	9080	*8950	6590	*7190	4980	*6040	3840	*5250	3000	*3460	2360	4250	2120	(47.3)
-3.0 m	kg	*8230	5990	*5780	3920	*4370	2830	*3490	2140	*2900	1660	*2490	1310			2030	1020	13.92
(-10 ft)	lb	*18140	13210	*12740	8640	*9630	6240	*7690	4720	*6390	3660	*5490	2890			4480	2250	(45.7)
-4.5 m	kg	*8310	5940	*5950	3830	*4540	2740	*3630	2070	*3000	1620	2510	1290			*2210	1140	13.20
(-15 ft)	lb	*18320	13100	*13120	8440	*10010	6040	*8000	4560	*6610	3570	5530	2840			*4870	2510	(43.3)
-6.0 m	kg	*8100	6010	*5900	3840	*4550	2730	*3640	2060	*2970	1620					*2340	1330	12.25
(-20 ft)	lb	*17860	13250	*13010	8470	*10030	6020	*8020	4540	*6550	3570					*5160	2930	(40.2)
-7.5 m	kg	*7580	6180	*5610	3930	*4350	2790	*3460	2120	*2740	1690					*2460	1670	10.97
(-25 ft)	lb	*16710	13620	*12370	8660	*9590	6150	*7630	4670	*6040	3730					*5420	3680	(36.0)
-9.0 m	kg	*6650	6460	*4980	4110	*3840	2940	*2930	2260									
(-30 ft)	lb	*14660	14240	*10980	9060	*8470	6480	*6460	4980									
-10.5 m	kg	*5040	*5040	*3730	*3730													
(-35 ft)	lb	*11110	*11110	*8220	*8220													

1. Lifting capacity is based on SAE J1097, ISO 10567.
2. Lifting capacity of the Robex Series does not exceed 75% of the tipping load with the machine on firm, level ground or 87% of full hydraulic capacity.
3. The load point is a hook located on the back of the bucket.
4. (*) indicates the load limited by hydraulic capacity.