

▲ SHD-RJ45(L)



▲ SHD-RJ45-8



▲ LZ-NET6

Technical data

Model		COMPUTER NETWORK		
Electrical characteristics		SHD-RJ45(L)	SHD-RJ45-8	LZ-NET6
Number of protected pairs		2 Pairs(1/2, 3/6)	4 Pairs(1/2, 3/6, 4/5, 7/8)	
Nominal operating voltage	U_n	24V	48V	48V
Max. continuous operating voltage	U_c	28.8V	48V	48V
Rated operating current at 25℃	I_L	0.5A	1A	1A
Nominal discharge current (8/20)	I_n(L-L/PE)	100A/2.5kA	150A/2.5kA	150A/2.5kA
Voltage protection level at I_n	Up(L-L/PE)	≤100V/≤1.3KV	≤150V/≤550KV	≤150V/≤550V
Transfer Speed	Vs	155Mbps	〈250MHz (Class E)	〈250MHz (Class E)
Connection terminals		RJ-45		
Response time	t_A	〈1ns		
Temperature range		-40℃~+80℃		
Degree of protection		IP 20		
Mounting		Bracket	DIN rail 35mm	DIN rail 35mm

Dimension / Internal configuration

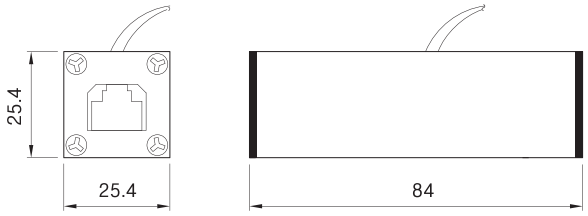

◀ SHD-RJ45(L)

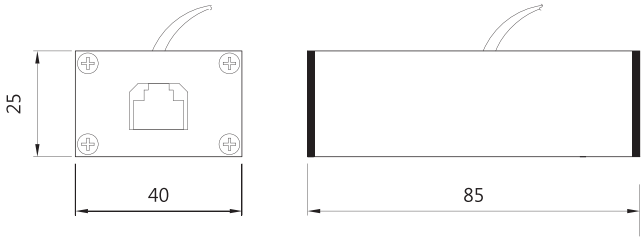

◀ SHD-RJ45-8

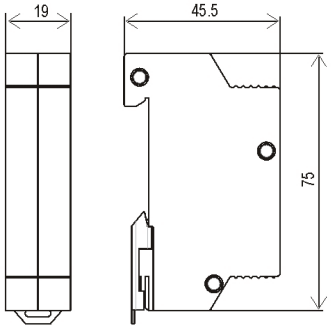

▲ LZ-NET6