

Park NX-Wafer

Low Noise, High Throughput Atomic Force Microscope with Automatic Defect Review & Atomic Force Profiler

www.parkAFM.com

Park SYSTEMS



Park NX-WAFER

The only wafer fab AFM with automatic defect review

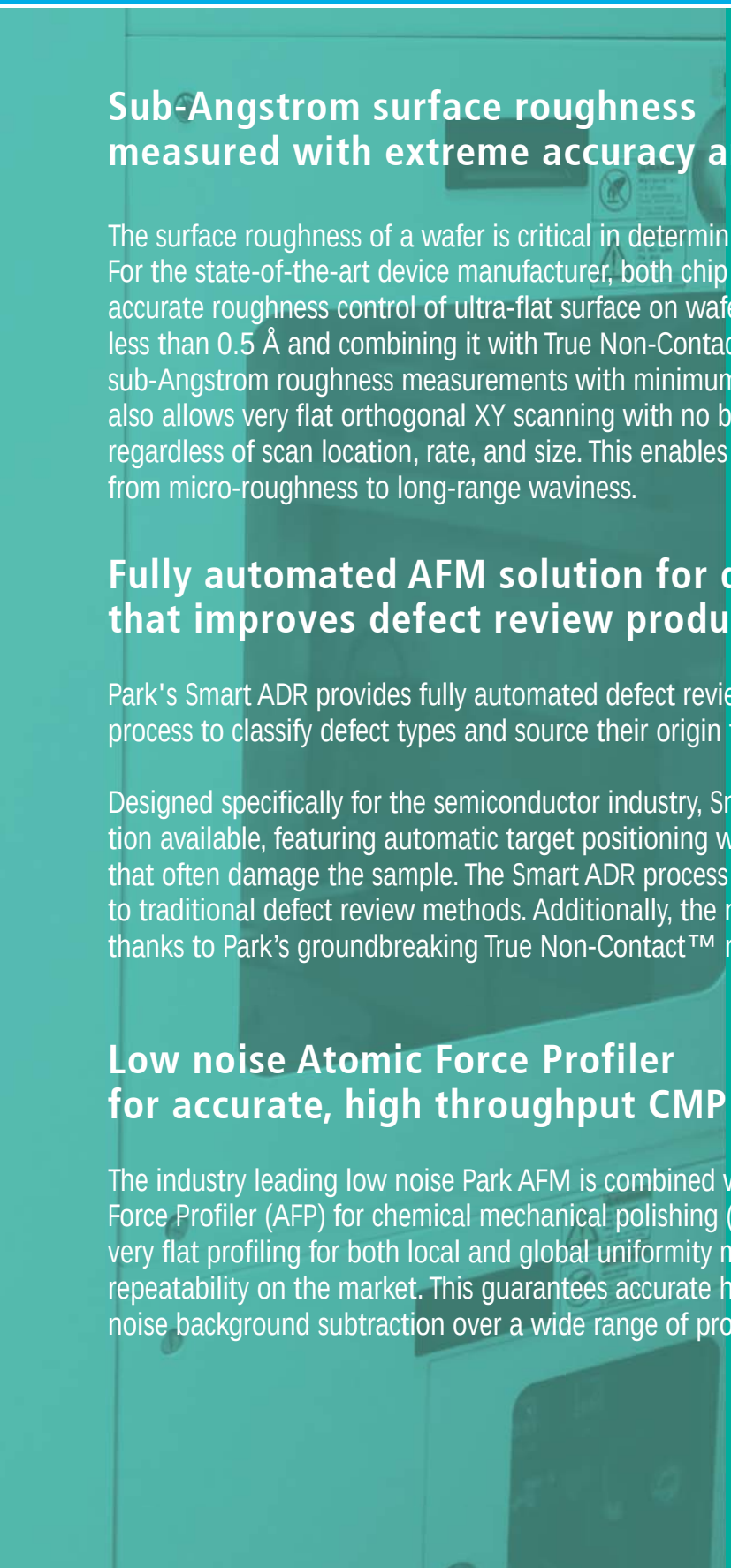

Sub-Angstrom surface roughness measured with extreme accuracy and minimized tip-to-tip variation

The surface roughness of a wafer is critical in determining the performance of a semiconductor device. For the state-of-the-art device manufacturer, both chip makers and wafer suppliers are demanding more accurate roughness control of ultra-flat surface on wafers. By delivering the industry's lowest noise floor of less than 0.5 Å and combining it with True Non-Contact™ mode, Park NX-Wafer can reliably acquire sub-Angstrom roughness measurements with minimum tip-to-tip variation. Park's Crosstalk Elimination also allows very flat orthogonal XY scanning with no background curvature, even on the flattest of surfaces regardless of scan location, rate, and size. This enables very accurate and repeatable surface measurement from micro-roughness to long-range waviness.

Fully automated AFM solution for defect imaging and analysis that improves defect review productivity by up to 1,000%.

Park's Smart ADR provides fully automated defect review and identification, enabling a critical inline process to classify defect types and source their origin through high resolution 3D imaging.

Designed specifically for the semiconductor industry, Smart ADR is the most advanced defect review solution available, featuring automatic target positioning without the need for labor intensive reference marks that often damage the sample. The Smart ADR process improves productivity by up to 1,000% compared to traditional defect review methods. Additionally, the new ADR capability offers up to 20x longer tip life thanks to Park's groundbreaking True Non-Contact™ mode AFM technology.

Low noise Atomic Force Profiler for accurate, high throughput CMP profile measurements

The industry leading low noise Park AFM is combined with a long range sliding stage to become an Atomic Force Profiler (AFP) for chemical mechanical polishing (CMP) metrology. The new low noise AFP provides very flat profiling for both local and global uniformity measurements with the best profiling accuracy and repeatability on the market. This guarantees accurate height measurements with no non-linear or high noise background subtraction over a wide range of profiling lengths.


Park
SYSTEMS
NX-Wafer
Atomic Force Microscope

Park NX-Wafer

High productivity and powerful features for inline wafer-fab metrology



High-Throughput Wafer-Fab Inspection and Analysis

- Automatic data acquisition and analysis of trench width, depth, and angle measurements
- Equipment Front End Module (EFEM) for automatic wafer handling
- Cleanroom compatibility and remote control interface

Accurate Sub-Angstrom Surface Roughness Control

- Industry's lowest noise floor of less than 0.5 Å rms* throughout the entire wafer area
- Immunity from parameter-dependent results with True Non-Contact™ mode
- Preserving the sharpness of the tip end for surface roughness accuracy
- 10x - 20x longer tip life than any other AFM

Full Automation of High Throughput Defect Imaging

- Direct linkage to defect mapping inspection tools without stage calibration
- Automatic coordinate translation and alignment of defect maps through enhanced vision
- Automated zoom-in AFM scan of specified defects
- Automated analysis of imaged defect types

Low Noise, High Throughput Atomic Force Profiler

- CMP profiling up to 50 mm* with long range traveling stage
- Industry leading sample topography repeatability measured by low noise Z detector
- Accurate surface height recording, even during high-speed profiling
- Superior tool-to-tool matching

* Measured in specific conditions, please consult Park Systems for details

Park NX-Wafer

Productivity meets Accuracy

Automatic Defect Review for Bare Wafers and Substrates

The new 300mm bare wafer ADR provides a fully automated defect review process from transfer and alignment of defect maps to the survey and zoom-in scan imaging of defects that uses a unique remapping process that does not require any reference marker on a sample wafer. Unlike SEM which leaves square-shaped destructive irradiation marks on defect sites after its run, the new Park ADR AFM enables advanced coordinate translation with enhanced vision that uses the wafer edge and notch to automatically enable linkage between a defect inspection tool and the AFM. Since it is fully automated, it does not require any separate steps to calibrate the stage of the targeted defect inspection system, increasing throughput by up to 1,000%.

Automatic Transfer and Alignment of Defect Maps with Enhanced Vision

By utilizing Park's proprietary coordinate translation technique, the new Park ADR AFM can accurately transfer the defect maps obtained from a laser-scattering defect inspection tool to a 300 mm Park AFM system. This technology does not require any separate step to calibrate the stage of the targeted defect inspection system and allows full automation for high throughput defect imaging.

Coordinate Translation of Defect Maps to AFM by Enhanced Vision

Coarse alignment

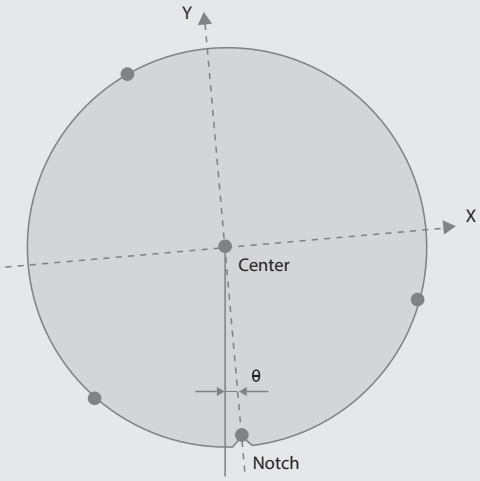

Fine alignment

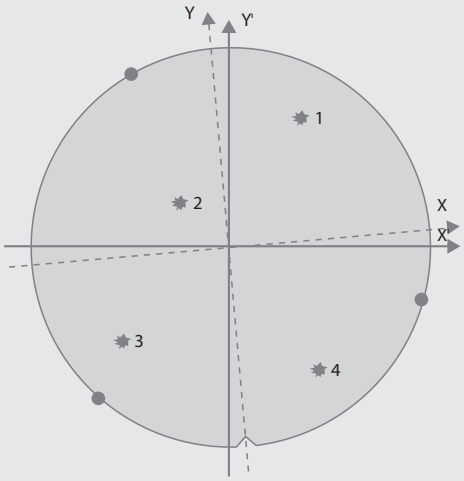

1. Wafer Center Position
2. Rotation Angle θ

Inspection Tool		ParkAFM
(X, Y)		(X', Y')
(X_1, Y_1)	→	(X'_1, Y'_1)
(X_2, Y_2)		(X'_2, Y'_2)
(X_3, Y_3)		(X'_3, Y'_3)
(X_4, Y_4)		(X'_4, Y'_4)

Automated Search & Zoom-in Scan

The defects are imaged in two steps; (1) a survey imaging, either by AFM or enhanced optical vision, to refine the defect location, then (2) a zoom-in AFM scan to obtain a detailed image of the defect, presenting automatic analysis of the defect type and the subsequent defect dimensions.

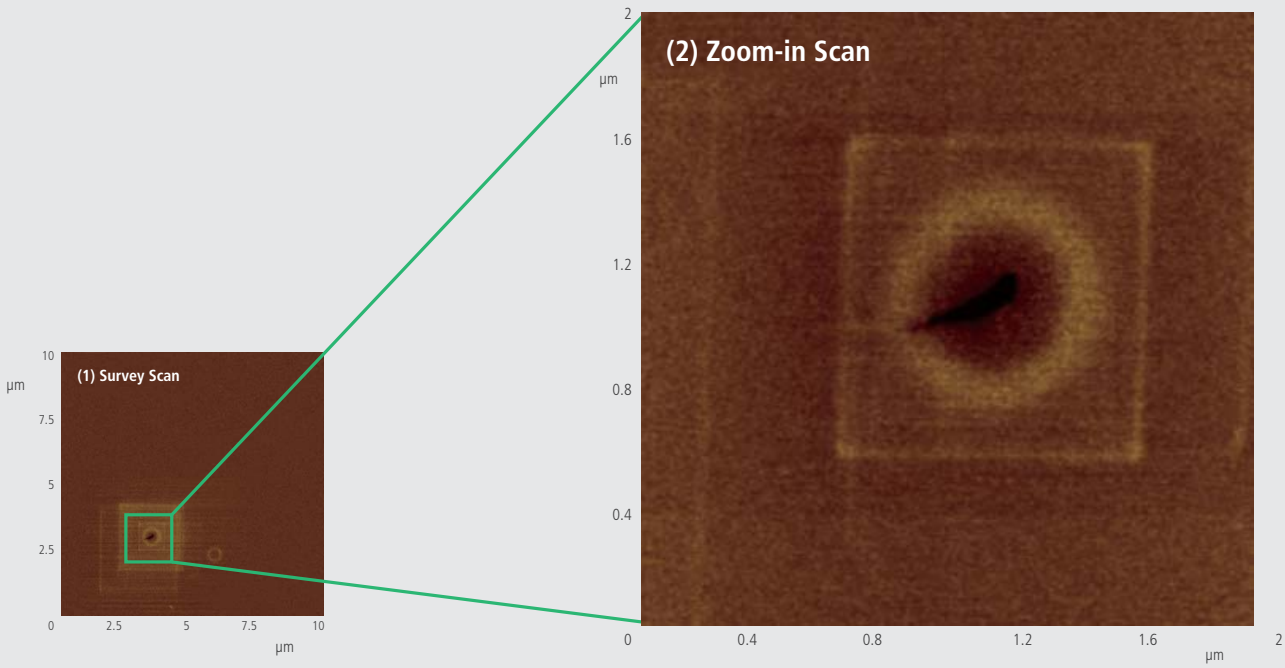

Sub-Angstrom Surface Roughness Control

Semiconductor suppliers are developing ultra-flat wafers to address the ever-increasing need for shrinking device dimensions. However, there has never been a metrology tool capable of providing accurate and reliable measurements for the sub-Angstrom roughness of these substrate surfaces. By delivering the industry's lowest noise floor of less than 0.5 Å throughout the wafer area, and combining it with True Non-Contact™ mode, the Park NX-Wafer can make accurate, repeatable, and reproducible sub-Angstrom roughness measurements for the flattest substrates and wafers with minimized tip-to-tip variation. Very accurate and repeatable surface measurements can be obtained even for the long-range waviness measurement of scan sizes up to 100 μm x 100 μm.

Long Range Profiling for CMP Characterization

Planarization is the most important step in the back-end processes where metals and dielectric materials are used. Both local and global uniformity after chemical mechanical polishing (CMP) affect the yield of chip manufacturing significantly. Accurate CMP profiling is a critical metrology necessary to optimize process conditions for best planarity and improve production yield.

Combining Park NX-Wafer with a sliding stage provides a long range profiling capability for CMP metrology. Due to the unique stage design of Park's automated AFM, the combined system provides very flat profiling and there is no need for complex background subtraction or past processing after each measurement in general. The Park NX-Wafer enables unprecedented CMP metrology of both local and global planarity measurements including dishing, erosion, and edge-over-erosion (EOE).

Park NX-Wafer

Powerful and yet reliable AFM

Industry's Lowest Noise Floor

To detect the smallest sample features, and image the flattest surfaces, Park has engineered the industry's lowest noise floor specification of < 0.5 Å. The noise floor data is determined using a "zero scan." The system noise is measured with the cantilever in contact with the sample surface at a single point under the following conditions:

- 0 nm x 0 nm scan, staying at one point.
- 0.5 gain in contact mode
- 256 x 256 pixels

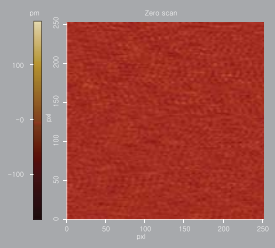

Typically 0.05 nm rms or lower

Statistics

Region	Mid(pm)	Mean(pm)	Rpv(pm)	Rq(pm)	Ra(pm)
Red	0.000	-0.011	359.496	30.025	19.177

Gauge Repeatability and Reproducibility

Due to the ever-decreasing size of components, manufacturers now require the highest level of quality control. Park AFM can provide 1 gauge sigma of less than 1 angstrom.

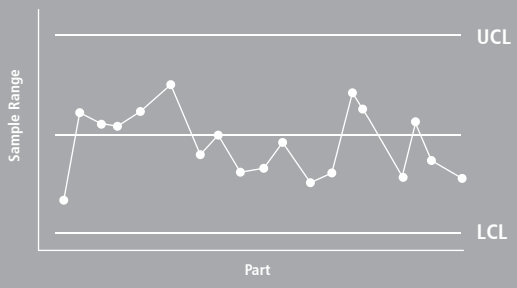

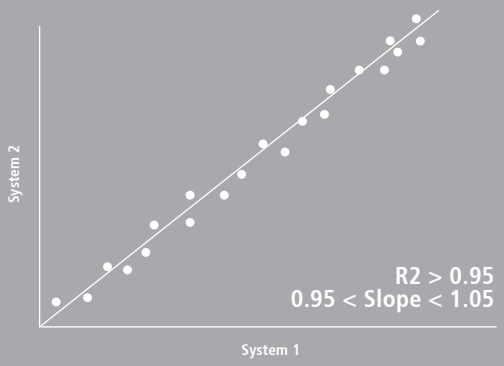

Tool-to-tool Correlation

Thanks to Park's revolutionary AFM platform designed for industrial metrology, Park NX-Wafer will correlate with any existing Park AFMs that have been previously used for manufacturing, inspection, analysis, or research.

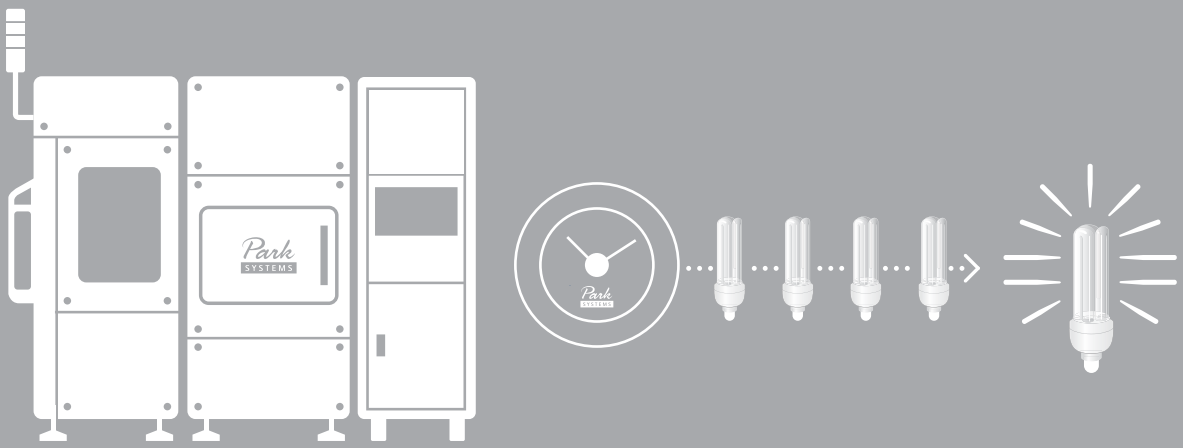

System Uptime

Our engineers and scientists have adopted the most rigorous industry standard product development to ensure the highest level of system reliability. Park NX-Wafer can be incorporated seamlessly either as an inline or as an offline inspection tool, with minimal maintenance requirements.

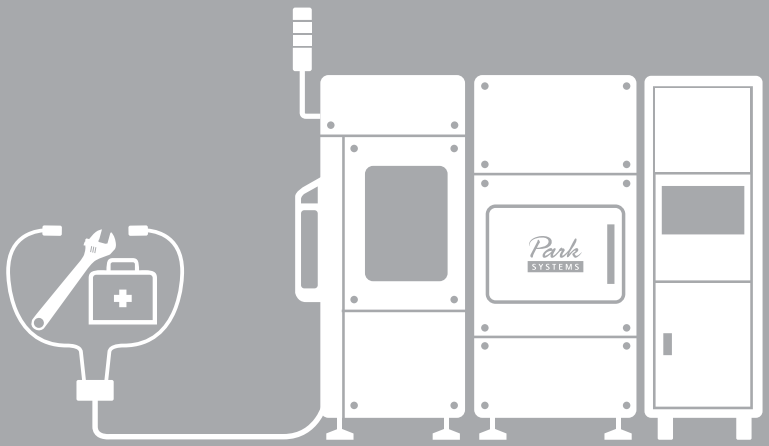

Service and Maintenance

Park is committed to the highest level of service and support. We put every effort to understand our customers' needs. We place the highest priority in meeting promised delivery dates, guaranteed quality, and thorough after-sales service.

Park NX-Wafer

Park AFM technology

Industry Leading Low Noise Z Detector

Our AFMs are equipped with the most effective low noise Z detectors in the field that produces highly accurate sample topography, no edge overshoot and creep effect. Just one of the many ways Park NX-Wafer saves you time and gives you better data.

Accurate Sample Topography Measured by Low Noise Z Detector

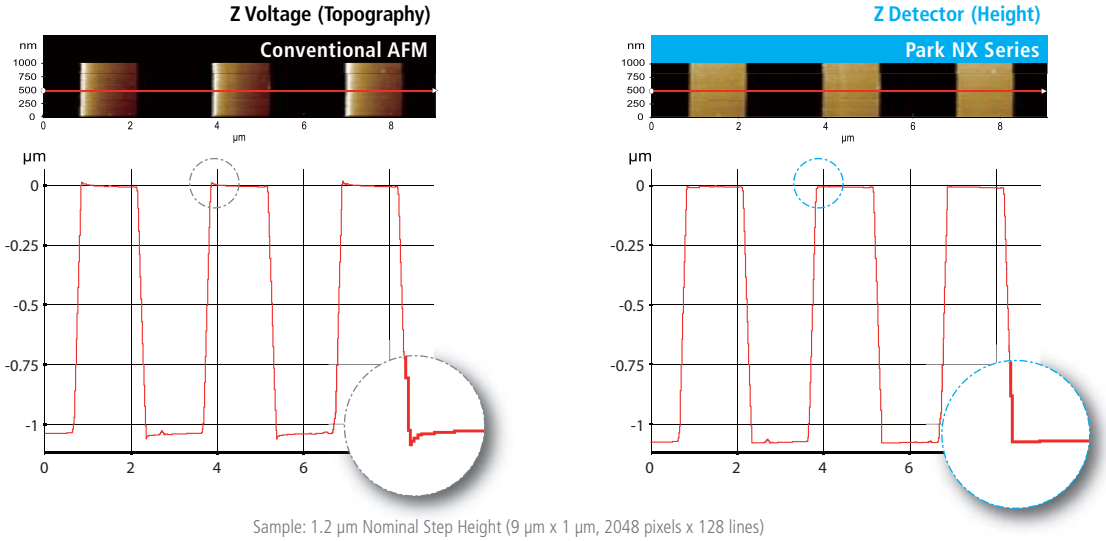

Sample: 1.2 µm Nominal Step Height (9 µm x 1 µm, 2048 pixels x 128 lines)

Piezoelectric creep effect

No creep effect

No artifact by AFM scanner in low noise closed-loop topography

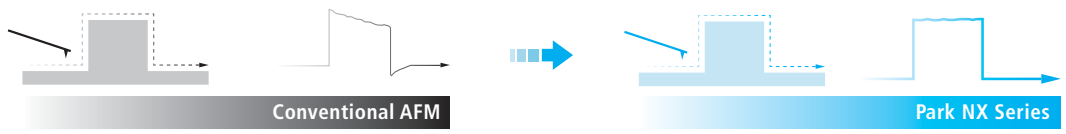



- Uses low noise Z detector signal for topography
- Has no edge overshoot at the leading and trailing edges
- Needs calibration at the factory and maintenance purpose only

True Non-Contact™ Mode Preserves Sharp Tip

AFM tips are so brittle that touching a sample will instantly reduce the resolution and quality of the image they produce. For soft and delicate samples, the tip will also damage the sample and result in inaccurate sample height measurements, something that can cost you valuable time and money.

True Non-Contact™ mode, a scan mode unique to Park AFMs, consistently produces high resolution and accurate data while maintaining the integrity of the sample.

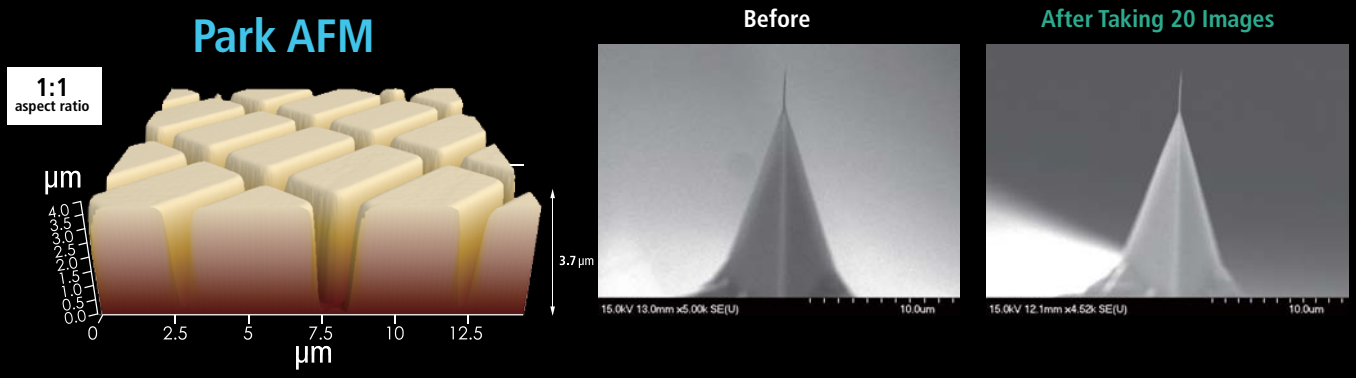

Accurate Feedback by Faster Z-servo enables True Non-Contact AFM

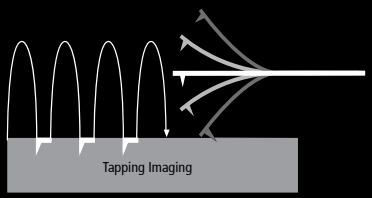

Tapping Imaging

- Quick tip wear = Blurred low-resolution scan
- Destructive tip-sample interaction = Sample damage and modification
- Highly parameter-dependent



True Non-Contact™ Mode

- Less tip wear = Prolonged high-resolution scan
- Non-destructive tip-sample interaction = Minimized sample modification
- Immunity from parameter dependent results

Park NX-Wafer

The most innovative AFM technology in one powerful package

Long Range Profiler (up to 50 mm)

The long range profiler is an essential component of Atomic Force Profilometry (AFP) and comes with a dedicated user interface for the automated CMP profiling and analysis.

- Maximum sliding range: up to 50mm
- Out-of-Plane Motion (OPM): less than ± 10 nm @ 10 mm range
- Max number of data points: up to 1,048,576

100 µm x 100 µm Flexure-Guided XY Scanner with Closed-loop Dual Servo System

The XY scanner consists of symmetrical 2-dimensional flexure and high-force piezoelectric stacks that provide highly orthogonal movement with minimal out-of-plane motion, as well as the high responsiveness essential for precise sample scanning at the nanometer scale. Two symmetric, low-noise position sensors are incorporated on each axis of the XY scanner to retain a high level of scan orthagonality for the largest scan ranges and sample sizes. The secondary sensor corrects and compensates for non-linear and non-planar positional errors caused by a single sensor alone.

15 µm High Speed Z Scanner with Low Noise Position Sensor

The NX-Wafer provides you with unprecedented accuracy in topography height measurement by utilizing its ultra-low noise Z detector instead of the commonly used Z voltage signal that is non-linear in nature. This industry leading low noise Z detector replaces the applied Z voltage as the topography signal. Driven by a high-force piezoelectric stack and guided by a flexure structure, the standard Z scanner has a high resonant frequency of enabling more accurate feedback. The maximum Z scan range can be extended from 15 µm to 40 µm with the optional long range Z scanner.

Automatic Tip Exchanger (ATX)

The ATX automatically locates tips by pattern recognition and uses a novel magnetic approach to disengage a used tip and pick up a new tip. The laser spot is then automatically aligned by motorized positioning technique.

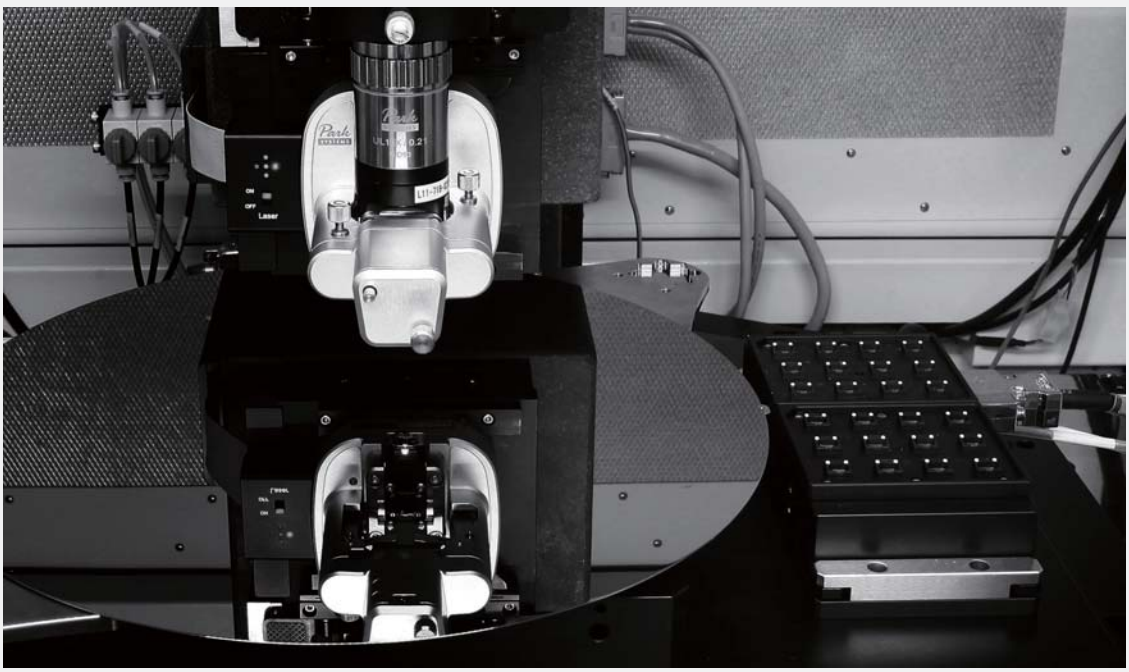

Ionization System for a more stable scanning environment

Our innovative ionization system quickly and effectively removes electrostatic charges in your sample's environment. Since the system always generates and maintains the ideal balance of positive and negative ions, it can create an extremely stable charge environment with little contamination of the surrounding area and minimal risk of accidental electrostatic charge during sample handling.

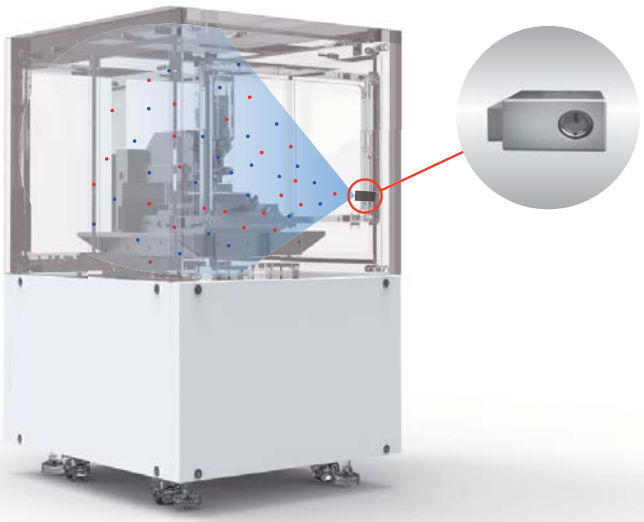



Automatic Wafer Handler (Cassette or FOUP)

The NX-Wafer can be configured for various automatic wafer handlers (Cassette or FOUP or other). The high-precision, nondestructive wafer handler robot arm fully ensures users always get fast and reliable wafer measurements.

Automatic Measurement Control so you can get accurate scans with less work

The NX-Wafer is equipped with automated software that makes operation nearly effortless. Just select the desired measurement program to get precise multi-site analysis with optimized settings for cantilever tuning, scan rate, gain, and set point parameters.

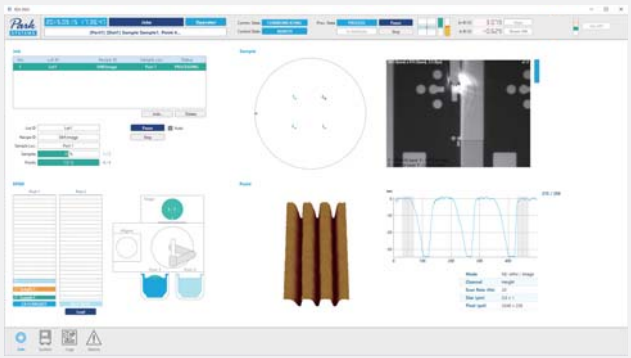

Park's user-friendly software interface gives you the flexibility to create customized operation routines so you can access the full power of the NX-Wafer and get the measurements you need.

Creating new routines is easy. It takes about 10 minutes to make one from scratch, or less than 5 minutes to modify an existing one.

Park NX-Wafer's automated system features:

- Auto, semi-auto, and manual mode so you have complete control
- Editable measurement method for each automated routine
- Live monitoring of the measurement process
- Automatic analysis of acquired measurement data

Park NX-Wafer
Specification

System Specification	200 mm Motorized XY stage	300 mm Motorized XY stage:
	travels up to 275 mm × 200 mm, 0.5 µm resolution	travels up to 400 mm × 300 mm, 0.5 µm resolution

Scanner Performances	XY Scanner	XY Scanner Resolution
	Single-module flexure XY scanner with closed-loop control 100 µm × 100 µm (large mode) 50 µm x 50 µm (medium mode) 10 µm × 10 µm (small mode)	0.15 nm (large mode)

Dimension & Weight	200 mm System	300 mm System
	2732 mm (w) x 1100 mm (d) x 2400 mm (h) w/ EFEM, 2110 kg approx. (incl. Control Cabinet) Ceiling Height: 2000 mm or more Operator Working Space: 3300 mm (w) x 1950 mm (d), minimum	3486 mm (w) x 1450 mm (d) x 2400 mm (h) w/ EFEM, 2950 kg approx. (incl. Control Cabinet) Ceiling Height: 2000 mm or more Operator Working Space: 4770 mm (w) x 3050 mm (d)

Park NX-Wafer 300 mm System (mm)

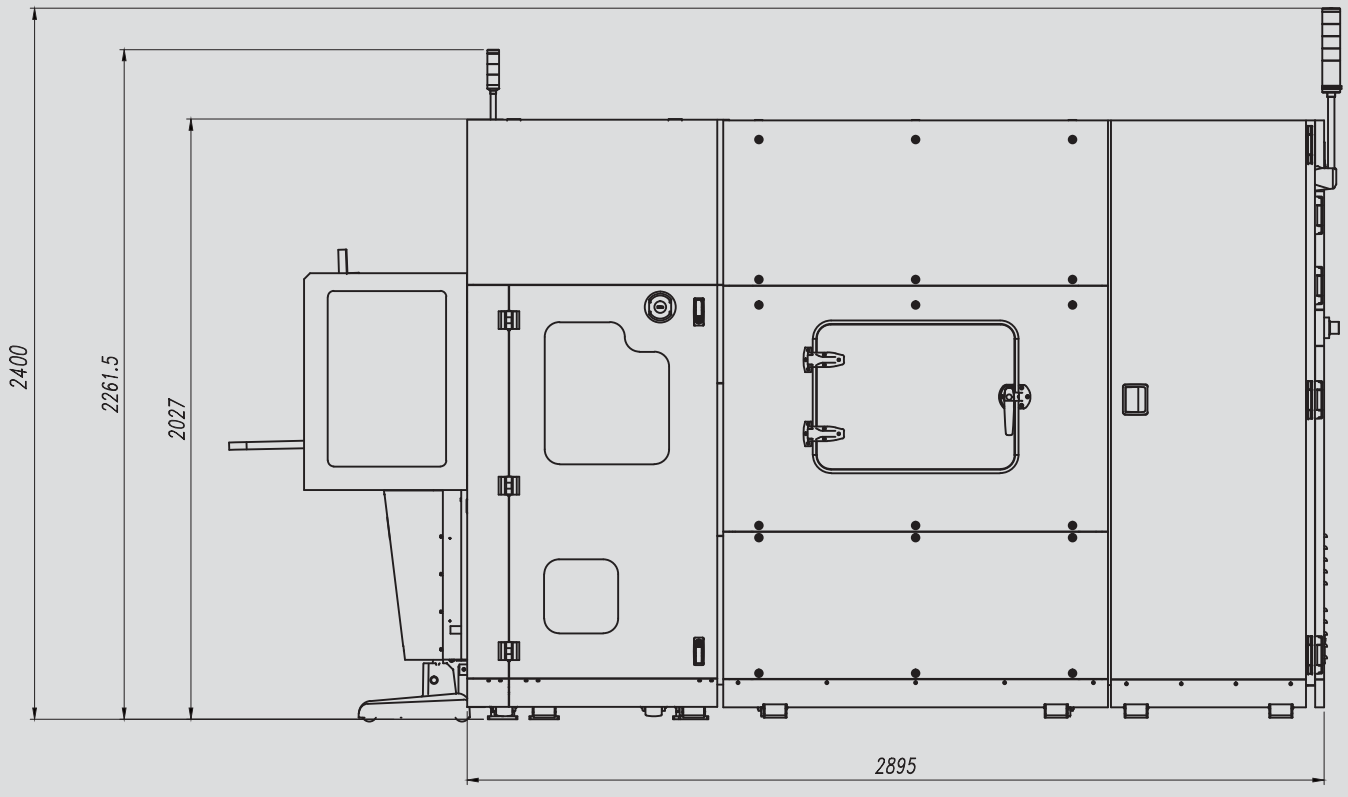

Motorized Z Stage	Motorized Focus Stage	Sample Thickness Allowance	COGNEX Pattern Recognition
25 mm Z travel distance 0.08 µm resolution < 1 µm repeatability	8 mm Z travel distance for on-axis optics	Up to 20 mm (open space)	pattern align resolution of 1/4 pixel

Z Scanner Range	Z Scanner Resolution	Z Scanner Noise Floor *
15 µm (large mode) 2 µm (small mode)	0.016 nm (large mode) 0.002 nm (small mode)	< 0.05 nm

Facility Requirements

Room Temperature (Stand By)	Room Temperature (Operating)	Humidity	Floor Vibration Level
10 °C ~ 40 °C	18 °C ~ 24 °C	30% to 60% (not condensing)	VC-E (3 µm/sec)

Acoustic Noise	Pneumatics	Power Supply Rating	Total Power Consumption	Ground Resistance
Below 65 dB	Vacuum: -80 kPa CDA (or N_2): 0.7 MPa	208 ~ 240 V, single phase, 15 A (max)	2 KW (typical)	Below 100 ohms

* Systems with profiler specification may differ from standard system configurations. Please consult Park Systems for detailed information.

Park NX-Wafer 300 mm System (mm)

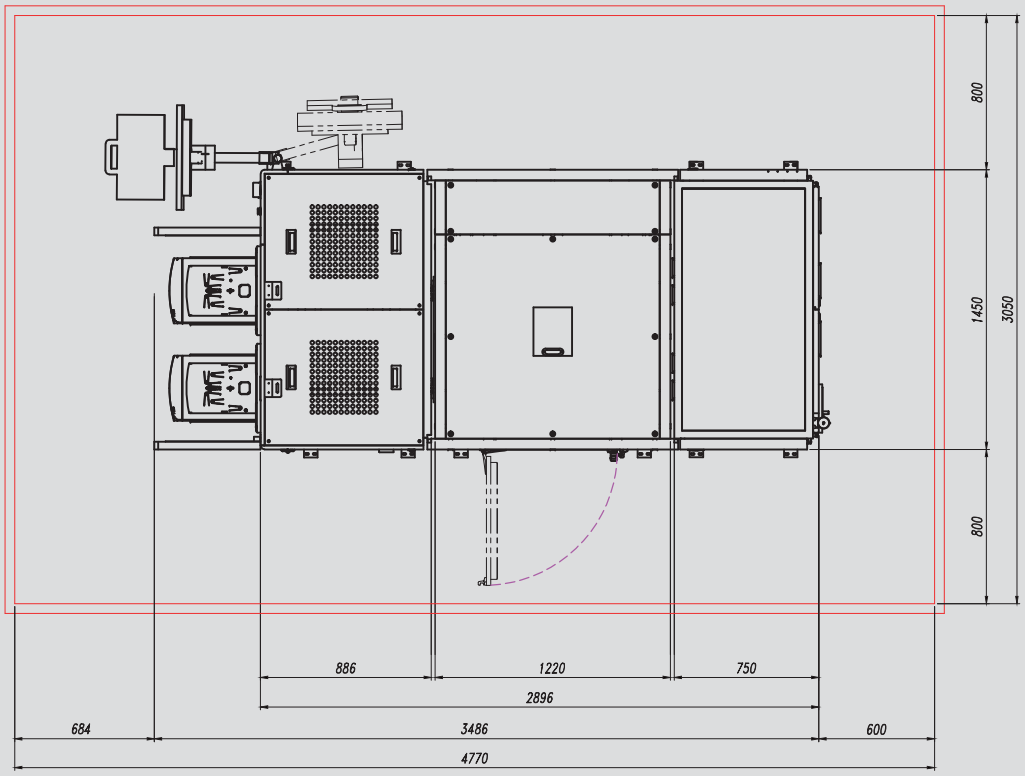

Park Systems

Dedicated to producing the most accurate and easiest to use AFMs

More than a quarter century ago, the foundations for Park Systems were laid at Stanford University where Dr. Sang-il Park, the founder of Park Systems worked as an integral part of the group that first developed AFM technology. After perfecting the technology, he then went on to create the first commercial AFM and later Park Systems was born.

Park Systems strives everyday to live up to the innovative spirit of its beginnings. Throughout our long history, we have honored our commitment to providing the most accurate and yet very easy to use AFMs, with revolutionary features like True Non-Contact™ mode, and many automated software tools. We are not simply content to rest on our past success. All of our products are designed with same care and creativity that went into our first, allowing you to focus on getting results without worrying about the integrity of your tools.

■ **The global headquarters is located at Korean Advanced Nanotechnology Center (KANC) in Suwon, Korea.**





Want to find out more about our world class nanoscale microscopy and metrology technology? Contact one of our representatives today:

ASIA

China: +86-10-6401-0651
India: +91-2266633915
Indonesia: +62-21-5698-2988
Malaysia: +603-8065-3889
Pakistan: +92-51-4444-112
Philippines: +632-463-6066
Saudi Arabia: +966-2-640-5846
Taiwan: +886-2-8227-3456
Thailand: +668-1424-3231
UAE: +971-4-339-2603
Vietnam: +84-4-35620516

EUROPE

France: +33-1-6953-8023
Germany: +49-6103-30098-0
Italy: +39-02-9009-3082
Israel: +972-3-923-9666
Switzerland: +41-22-788-9186
Romania: +40-733944144
Russia: +7 (495) 22-11-208
Spain and Portugal: +34-902-244-343
Turkey: +90-312-236-42-0708
UK an Ireland: +44(0)1372-378-822
Benelux, Scandinavia, and Baltics: +31-184-64-0000

OCEANIA

Australia and New Zealand: +61-2-9319-0122

AMERICAS

USA: +1-408-986-1110
Canada: +1-888-641-0209
Brazil: +55-11-4178-7070
Chile: +56-2-2245-4805
Colombia: +57-347-0060
Ecuador: +593-2-284-5287
Mexico: +(55) 4544-4441

Note: All specifications are subject to change without notice.
Please visit our website for the most up-to-date specifications.

Enabling Nanoscale Advances

GLOBAL HEADQUARTERS: +82-31-546-6800
AMERICAS HEADQUARTERS: +1-408-986-1110
JAPAN HEADQUARTERS: +81-3-3219-1001
SE ASIA HEADQUARTERS: +65-6634-7470
E-mail: inquiry@parkAFM.com
Web: www.parkAFM.com

Park SYSTEMS