# Model SIL

## Depth and Level Transmitter with Local Indication

## Description

SIL model, has Case Protection(IP67), Sensor Protection(IP68) is able to use in an outdoor area and at the place is required to be waterproofed. With 4-1/2 Digit Backlight LCD, it can not only display up to ±19999 but also is visible from the dark place. Its functions, Analog output, Relay output and RS-485 communication, Pressure Unit convertor and Scale adjustment can be utilized with a variety of controller. In addition, it can perform atmospheric compensation and use in seawater with the polyurethane vented cable.

## Features

- 4 1/2 digit Backlight LCD display
- Built-in amplifier circuit(VDC, mA)
- Optional 2-channel Relay output, RS485
- Measuring range 0~350m(35kgf/㎠)
- 0.2%FS accuracy
- Fully sealed construction
- Vented polyurethane cable
- Stainless steel(316L) meaia-wetted materials



## Applications

- Tank Level Measurement
- Deep Well Measurement
- Ship & Marine System
- Ground & Surface Water Monitoring
- Geophysical Application
- Water Supply & Reservoirs

## Specifications

| | 2Wire Output | 3Wire Output |
|---|---|---|
| **Range** | | |
| | 0~1 ... 350 $mH_2O$ (Gauge)<br>0~10 ... 350 $mH_2O$ (Absolute) | |
| **Performance** | | |
| Accuracy | ±0.2%FS ± 1digit | |
| Thermal Effect on Zero | ±0.03%FS/℃ | |
| Thermal Effect on Span | ±0.03%FS/℃ | |
| Compensated Temperature Range | 0 ~ 70℃ | |
| Operating Temperature Range | -20 ~ 80℃ | |
| **Electrical** | | |
| Display | ±19999(4 1/2) Backlight LCD | |
| Excitation | 11~28VDC | 17~28VDC |
| Output | | |
| Analog | 4~20mA(2Wire) | 4~20mA(3Wire), 0~5V, 1~5V, 0~10V |
| Switching(Option) | - | 2Ch Relay(3A 30VDC / 3A 250VAC) |
| Digital(Option) | - | RS485 |
| Response Time | 0.1~1sec | |
| Electrical Connection | G(PF) 1/2" | |
| **Physical** | | |
| Proof Pressure | X3 | |
| Burst Pressure | X4 | |
| Vibration | 49.1m/s2{5G}, 10~500Hz | |
| Shock | 490m/s2{50G} | |
| Pressure Port | | |
| Sensor Part | Nose cone, G(PF)1/4" | |
| Display Part | Flange & Other Connection Available on Request | |
| Media-Wetted Materials | Stainless Steel 316L | |
| Protection | | |
| Sensor Part | IP68 | |
| Case Part | IP67 | |

## Dimension

### ▶ Out Dimension

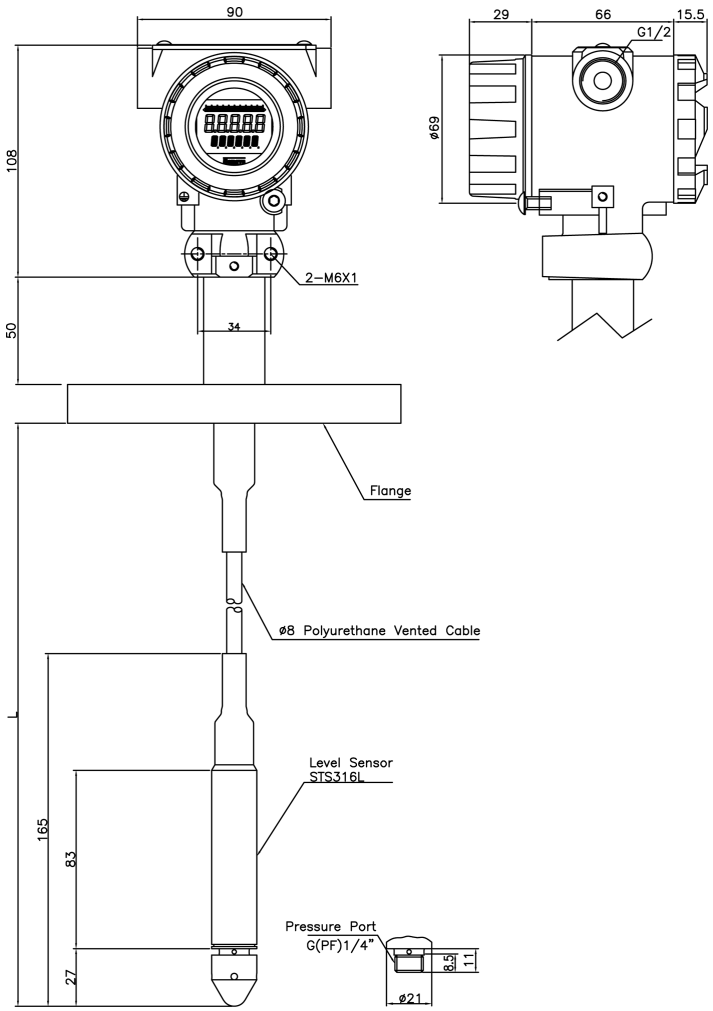


### ▶ Front Panel

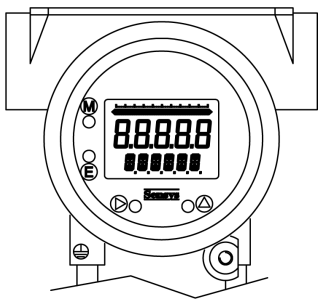

Non Switching Output Type

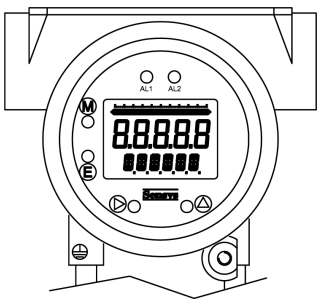


Switching Output Type

### ▶ Connection

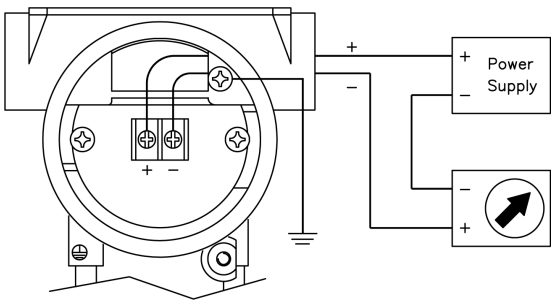


2Wire Output Type

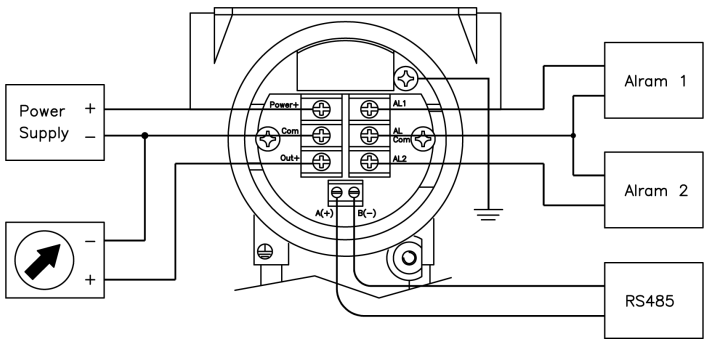


3Wire Output(Option : Switching Output, RS485)

## Alarm Mode

▶ Hi Mode

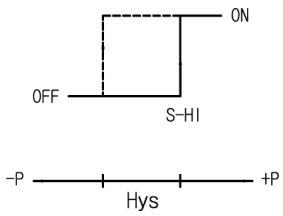


▶ Low Mode

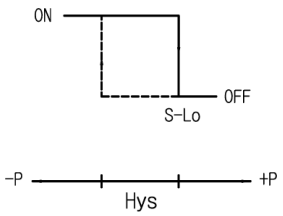


▶ A Mode

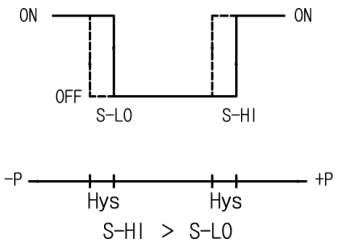


▶ B Mode

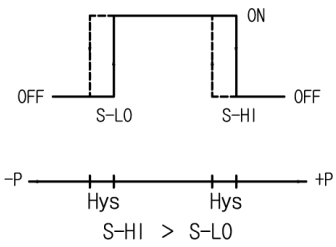


## Ordering Information

**SIL H A 0010 K J G - □**

**Model Name**

**Analog Output**
- C : 0~5V
- E : 1~5V
- G : 4~20mA(3Wire)
- H : 4~20mA(2Wire)
- J : 0~10V

**Switching & Digital Output**
- A : None
- B : 2-Ch. Relay
- C : RS485
- D : 2-Ch. Relay, RS485

**Pressure Range**
- XXXX : Pressure

**Option**

**Type of Pressure Measurement**
- G : Gauge
- J : Absolute

**Mounting Connection**
- J : Flange
- V : Thread
- *. Flange & Other Connection Available on Request

**Pressure Unit**
- R : kPa
- B : bar
- P : psi
- C : $cmH_2O$
- M : MPa
- K : kgf/㎠
- H : mmHg


Sensys SENSOR SYSTEM TECHNOLOGY CO., LTD.
ADD : Rm.5010, Ansan Digital Park, 81, Neungan-ro, Danwon-gu, Ansan-si, Gyeonggi-do, Korea.
TEL : 82-31-310-8910~9
FAX : 82-31-310-8920
http://www.sensys.co.kr
e-mail : master@sensys.co.kr


· Specifications are subject to change without notice.


Copyright © 2015 SENSOR SYSTEM TECHNOLOGY CO., LTD.(20150810)