# Loudspeaker Specification Sheet

Model Number : BH15M006L

Revision : Rev 00.
Date : 20.JUN.17

## Features:

- Driver Type : Tweeter
- Size : 20mm (0.8inch)
- Magnet : Ferrite
- Frame : Plastic
- Diaphragm : PPS



## Specifications:

- Rated Power Handling : 5W (RMS)
- Characteristic Sensitivity : 88.5dB ± 2dB (1W/1m)
- Nominal Impedance : 8Ω
- Free Air Resonance Frequency, fs : 1.0kHz ± 20%
- Frequency Range : fs ~ 20kHz ± 20%
- Voice Coil Inner Diameter : Ø20.4 (mm)
- Net Weight : 206g (7.3oz)

## Dimensions & Mounting Information:

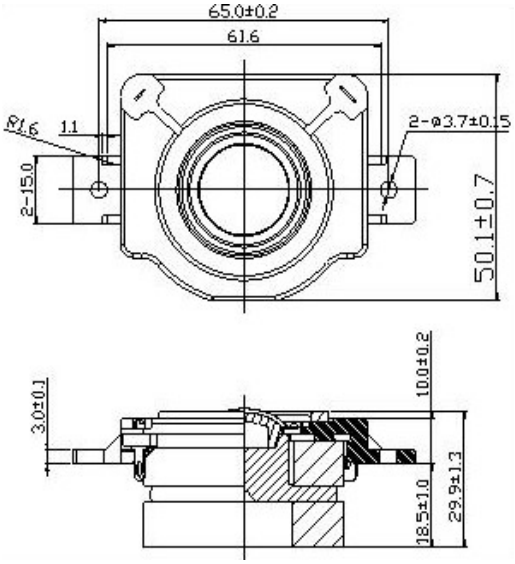


## Frequency & Impedance Response:

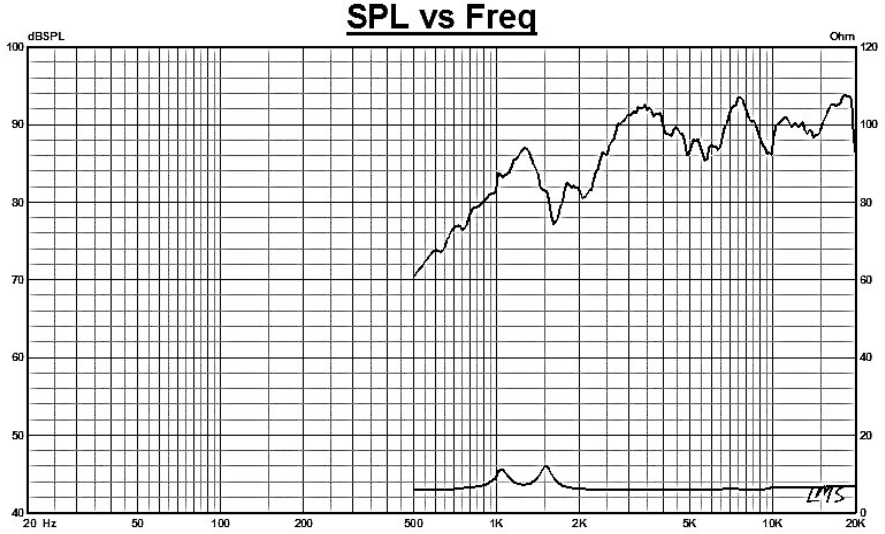


http://www.bhacoustic.com
105, Sinwon-ro, Yeongtong-gu, Suwon-si, Gyeonggi-do, Republic of Korea 16678
Tel : +82(31)-206-5477 Fax : +82-(21)-206-5473