Zurcon® Wynseal





Double Acting

Rubber Energized Plastic Faced Seal

High Static and Dynamic Sealing Effect

Material:
Zurcon® + NBR

■ Zurcon® Wynseal



Description
The Zurcon® Wynseal is a double-acting seal consisting of a special polyurethane seal ring and an O-Ring as energizing element (Figure 43).

The particular characteristic of the seal is the special design of the seal edge profile. Two external seal edges act as primary seal for pressures from both sides and prevent any build-up of hydrodynamic pressure over the seal profile and the risk of the blow-by effect. The central back-up and sealing bulge increases the sealing effect*. Grooves are provided on both sides on the plane surfaces to provide activation of the energizing O-Ring. These ensure direct pressure loading of the seal under all operating conditions.

Since the installation groove is identical to that for the Turcon® Glyd Ring®, the seal is ideal for the standardisation of cylinder construction if, efficient and low cost seal elements are demanded in large quantities and, the cylinder can be adapted to meet different operating conditions. It has to be taken into consideration that in this case the gap dimension has to be checked!

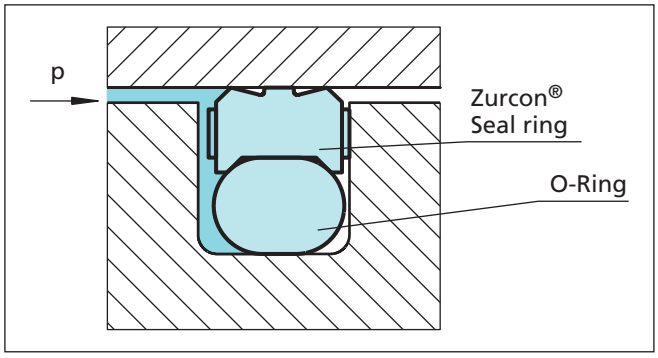

Figure 43 Zurcon® Wynseal

Advantages

- High static and dynamic sealing effect
- High abrasion resistance
- Simple groove design, one-piece piston possible
- Suitable for grooves to ISO 7425, Part 1.

* Only from PW42 and the following Series No.; PW40 and PW41 without sealing and supporting bulge.

Application Examples

The Zurcon® Wynseal is the recommended

element for double acting pistons of hydraulic components in various sectors such as:

- Machine tools
- Forklifts & handling machinery
- Agriculture
- Industrial hydraulic light to medium duty

Technical Data

Pressure:	Up to 25 MPa Up to 40 MPa	(Z20N) (Z23N)
Speed:	Up to 0.5 m/s	
Temperature:	-35 °C to +110 °C	
Media:	Mineral oil-based hydraulic fluids	

Important Note:
The above data are maximum values and cannot be used at the same time. e.g. the maximum operating speed depends on material type, pressure, temperature and gap value. Temperature range also dependent on medium.

Materials

Wynseal:	Zurcon® Z20, 93 Shore A (on request 96 Shore A:reference Z23)
O-Ring:	NBR 70 Shore A
Set reference:	Z20N (Z23N)

■ Installation Recommendation

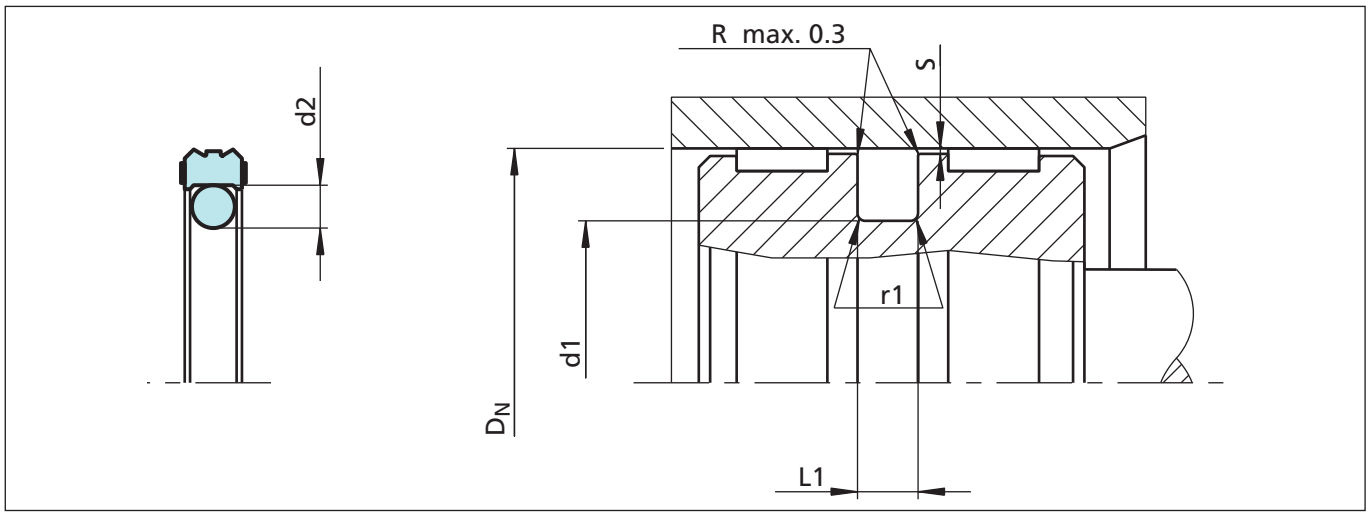

Figure 44 Installation drawing

Table XLVIII Installation dimensions

Series No.	Groove Diameter	Groove Width	Radius	Radial Clearance	O-Ring Cross Section
	d1 h9	**L1** +0.2	**r1**	**S max**	**d2**
PW40	DN - 4,9	2.2	0.4	0.20	1.78
PW41	DN - 7.5	3.2	0.6	0.25	2.62
PW42	DN - 11.0	4.2	1.0	0.25	3.53
PW43	DN - 15.5	6.3	1.3	0.30	5.33
PW44	DN - 21.0	8.1	1.8	0.30	7.00

Ordering example

Wynseal for ISO groove
Bore diameter: D_N = 63 mm
Series No. PW43
TSS Part No. PW4300630 (from Table XLIX)
Material Z20
material code: Z20
O-Ring material code: N
Set code: Z20N

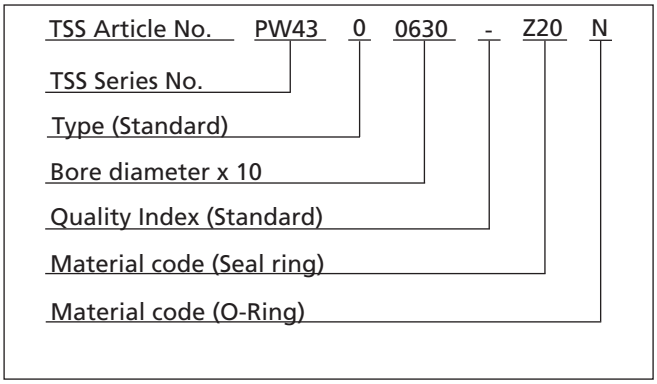

Material Z23

material code:	Z23
O-Ring material code:	N
Set code:	Z23N

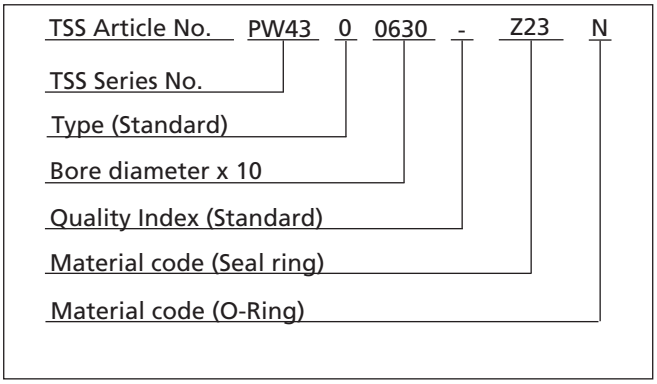

Table XLIX Installation dimensions / TSS Part No.

Bore Diameter	Groove Diameter	Groove Width	TSS Part No.
D_N H9	d_1 h9	L1 +0.2	
12.0	7.1	2.2	PW4000120
12.0	4.5	3.2	PW4100120
16.0	**8.5**	**3.2**	**PW4100160**
20.0	**12.5**	**3.2**	**PW4100200**
22.0	14.5	3.2	PW4100220
24.0	16.5	3.2	PW4100240
25.0	**17.5**	**3.2**	**PW4100250**
25.0	**14.0**	**4.2**	**PW4200250**
30.0	22.5	3.2	PW4100300
32.0	**24.5**	**3.2**	**PW4100320**
32.0	**21.0**	**4.2**	**PW4200320**
35.0	27.5	3.2	PW4100350
35.0	24.0	4.2	PW4200350
36.0	28.5	3.2	PW4100360
38.0	30.5	3.2	PW4100380
40.0	**32.5**	**3.2**	**PW4100400**
40.0	**29.0**	**4.2**	**PW4200400**
42.0	31.0	4.2	PW4200420
45.0	34.0	4.2	PW4200450
45.0	29.5	6.3	PW4300450
49.0	38.0	4.2	PW4200490
50.0	**39.0**	**4.2**	**PW4200500**
50.0	34.5	6.3	PW4300500
52.0	36.5	6.3	PW4300520
55.0	44.0	4.2	PW4200550
55.0	39.5	6.3	PW4300550
56.0	45.0	4.2	PW4200560

The sizes printed in **bold** type are suitable for grooves to ISO 7425/1. Additional dimensions can be delivered on request.

Bore Diameter	Groove Diameter	Groove Width	TSS Part No.
D_N H9	d_1 h9	L1 +0.2	
57.0	46.0	4.2	PW4200570
60.0	49.0	4.2	PW4200600
60.0	44.5	6.3	PW4300600
63.0	**52.0**	**4.2**	**PW4200630**
63.0	**47.5**	**6.3**	**PW4300630**
65.0	54.0	4.2	PW4200650
65.0	49.5	6.3	PW4300650
70.0	59.0	4.2	PW4200700
70.0	54.5	6.3	PW4300700
75.0	64.0	4.2	PW4200750
75.0	59.5	6.3	PW4300750
80.0	**69.0**	**4.2**	**PW4200800**
80.0	**64.5**	**6.3**	**PW4300800**
85.0	69.5	6.3	PW4300850
90.0	74.5	6.3	PW4300900
95.0	79.5	6.3	PW4300950
100.0	**84.5**	**6.3**	**PW4301000**
105.0	89.5	6.3	PW4301050
110.0	94.5	6.3	PW4301100
115.0	99.5	6.3	PW4301150
120.0	104.5	6.3	PW4301200
125.0	**109.5**	**6.3**	**PW4301250**
125.0	**104.0**	**8.1**	**PW4401250**
130.0	114.5	6.3	PW4301300
135.0	114.0	8.1	PW4401350
140.0	119.0	8.1	PW4401400
150.0	129.0	8.1	PW4401500
160.0	**139.0**	**8.1**	**PW4401600**
170.0	149.0	8.1	PW4401700
180.0	159.0	8.1	PW4401800
190.0	169.0	8.1	PW4401900
200.0	**179.0**	**8.1**	**PW4402000**
210.0	189.0	8.1	PW4402100
220.0	199.0	8.1	PW4402200
230.0	209.0	8.1	PW4402300
240.0	219.0	8.1	PW4402400
250.0	**229.0**	**8.1**	**PW4402500**
300.0	279.0	8.1	PW4403000

The sizes printed in **bold** type are suitable for grooves to ISO 7425/1. Additional dimensions can be delivered on request.