Product Brochure

June 2016

Anritsu

M5 Series
Metal Detector



M5 Dual Wave



Simplified Operation

Easily navigated one-touch operation for frequently used functions.
Built-in support features improve productivity and accuracy.

Minimize False Rejects



Built-in troubleshooting screens determine the cause of false rejects and provide suggestions to ensure repeatable, stable system performance.

Improved Troubleshooting and Help Screens



Accurate illustrated Help messages minimize production line downtime by reducing the need for outside service support.

Industry Leading Design



Precision engineered head design provides improved stability that eliminates errors caused by external sources, such as floor vibration or electronic "noise" from machinery located in close proximity.



Hygienic design features include an open frame construction that prevents build up and facilitates fast and easy clean-up and sanitation.
Available in IP30 and IP66 models



Anritsu Proprietary Next Generation, High Sensitivity Technology



Industry Leading Dual Wave Processing

- Increased temperature stability
- Reduced false rejects caused by exterior sources
- Improved self-diagnostic abilities

Anritsu's unique dual-frequency system.

Anritsu's proprietary dual-frequency design determines the optimal settings to maximize sensitivity for both ferrous and non-ferrous metals, while helping to reduce false rejects.

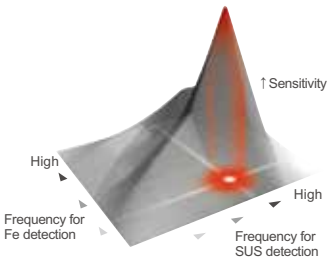

Operator Friendly Tutorials for Product Registration and Smart Guide

Product Registration Navigation

Simplified, illustrated parameter setting procedures with step-by-step instructions

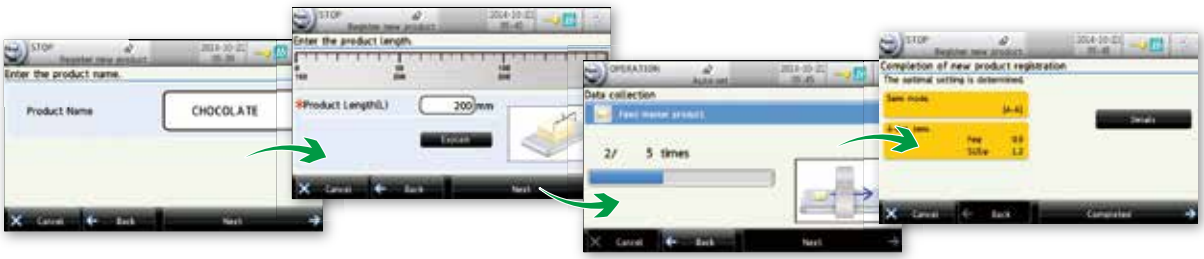

Smart Guide

Supports daily operations and maintenance procedures through clear, concise messaging.





Full system or detector head only options available.

Contact our sales representatives for details.



Test piece

Test pieces of Fe sphere, SUS304 sphere, SUS wire and non-ferrous metal sphere in varied sizes are available.

Entry Model

Maximum pass width: 300 mm

KDB3005AHF / AHW
Pass height: 50 mm

KDB3008AHF / AHW
Pass height: 80 mm

KDB3012AHF / AHW
Pass height: 120 mm

KDB3015AHF / AHW
Pass height: 150 mm

KDB3018AHF / AHW
Pass height: 180 mm

External Dimensions Non-Waterproof Waterproof

KDB3005AHF
KDB3005AHW
KDB3008AHF
KDB3008AHW
KDB3012AHF
KDB3012AHW
KDB3015AHF
KDB3015AHW
KDB3018AHF
KDB3018AHW

Model	H1	H2
KDB3005AHF / AHW	50	925
KDB3008AHF / AHW	80	925
KDB3012AHF / AHW	120	965
KDB3015AHF / AHW	150	995
KDB3018AHF / AHW	180	1025

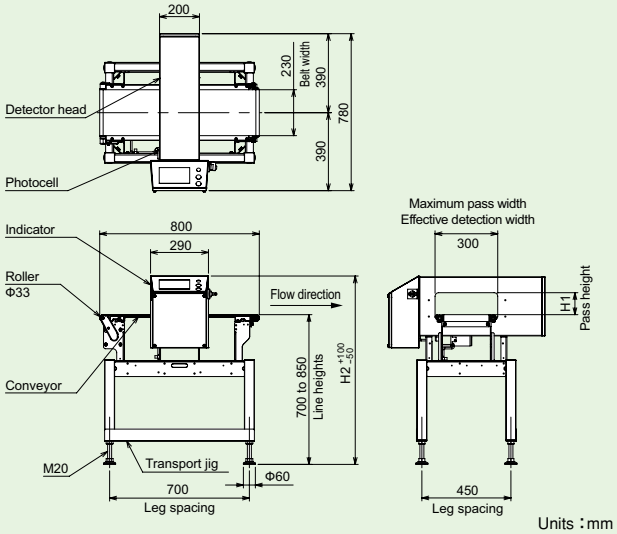

Specifications

Model	Non-Waterproof	KDB3005AHF	KDB3008AHF	KDB3012AHF	KDB3015AHF	KDB3018AHF
	Waterproof	KDB3005AHW	KDB3008AHW	KDB3012AHW	KDB3015AHW	KDB3018AHW
Pass height		50 mm	80 mm	120 mm	150 mm	180 mm
Maximum pass width		300 mm				
Belt width		230 mm				
Display		7-inch color TFT LCD				
Operation method		Touch panel (Start, Stop, and Home are direct push buttons)				
Preset memory		Maximum 200				
Product packaging		Both general and aluminum-evaporated-packaging products				
Detection method		Simultaneous 2-frequency magnetization detection method				
Belt speed [1]		25 m/min (50 Hz), 30 m/min (60 Hz)				
Maximum product weight [2]		15 kg				
Metal detection		Rejection signal output and beep, or belt stop and beep				
Power supply [3, 4]		100 Vac, single phase 50/60 Hz ; 110/115/120 Vac, single phase 60 Hz ; 200 Vac, single phase 50/60 Hz ; 220/230 Vac, single phase 50/60 Hz ; or 240 Vac, single phase 50 Hz				
Power consumption		160 VA, rush current 50 A (typ.) (20 ms or less)				
Mass		77 kg	76 kg	79 kg	81 kg	82 kg
Environmental conditions		0 to 40°C, relative humidity 30 to 85%, non-condensing				
Protection class		AHF type: IP30 compliance / AHW type: IP66 compliance				
Exterior		Indicator and detector head: stainless steel (SUS304) Conveyor frame and stand AHF type: metal (coating) / AHW type: stainless steel (SUS304)				
Data output		USB port as an option (USB2.0), Ethernet interface as an option (10BASE-T, 100BASE-TX)				

1: Belt speeds other than those listed above are available as options. Contact our sales representatives for details.
2: Sum total of product weight on the conveyor. Feed capacity may vary according to the belt speed.
3: Specify one of these power supplies for use when ordering.
4: Please use the rated voltage for the power supply voltage.
A rise of a temperature in the motor may occur when the variation width of the power supply voltage is large.
Conveyor torque may deteriorate when the power supply voltage is low.
Note: The shape (length, width, and height) of products to be inspected varies with the rejector type.
Note: The noise level of the metal detectors does not exceed 70 dB (A).

Entry Model

Maximum pass width: 450 mm

KDB4505AHF / AHW
Pass height: 50 mm

KDB4510AHF / AHW
Pass height: 100 mm

KDB4513AHF / AHW
Pass height: 130 mm

KDB4515AHF / AHW
Pass height: 150 mm

KDB4518AHF / AHW
Pass height: 180 mm

External Dimensions Non-Waterproof Waterproof

KDB4505AHF
KDB4505AHW
KDB4510AHF
KDB4510AHW
KDB4513AHF
KDB4513AHW
KDB4515AHF
KDB4515AHW
KDB4518AHF
KDB4518AHW

Model	H1	H2
KDB4505AHF / AHW	50	925
KDB4510AHF / AHW	100	945
KDB4513AHF / AHW	130	975
KDB4515AHF / AHW	150	995
KDB4518AHF / AHW	180	1025

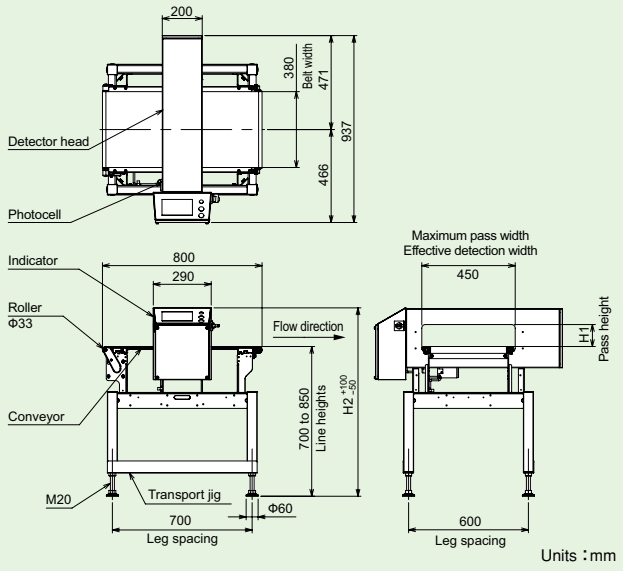

Specifications

Model	Non-Waterproof	KDB4505AHF	KDB4510AHF	KDB4513AHF	KDB4515AHF	KDB4518AHF
	Waterproof	KDB4505AHW	KDB4510AHW	KDB4513AHW	KDB4515AHW	KDB4518AHW
Pass height		50 mm	100 mm	130 mm	150 mm	180 mm
Maximum pass width		450 mm				
Belt width		380 mm				
Display		7-inch color TFT LCD				
Operation method		Touch panel (Start, Stop, and Home are direct push buttons)				
Preset memory		Maximum 200				
Product packaging		Both general and aluminum-evaporated-packaging products				
Detection method		Simultaneous 2-frequency magnetization detection method				
Belt speed [1]		25 m/min (50 Hz), 30 m/min (60 Hz)				
Maximum product weight [2]		15 kg				
Metal detection		Rejection signal output and beep, or belt stop and beep				
Power supply [3, 4]		100 Vac, single phase 50/60 Hz ; 110/115/120 Vac, single phase 60 Hz ; 200 Vac, single phase 50/60 Hz ; 220/230 Vac, single phase 50/60 Hz ; or 240 Vac, single phase 50 Hz				
Power consumption		160 VA, rush current 50 A (typ.) (20 ms or less)				
Mass		85 kg	86 kg	87 kg	89 kg	90 kg
Environmental conditions		0 to 40°C, relative humidity 30 to 85%, non-condensing				
Protection class		AHF type: IP30 compliance / AHW type: IP66 compliance				
Exterior		Indicator and detector head: stainless steel (SUS304) Conveyor frame and stand AHF type: metal (coating) / AHW type: stainless steel (SUS304)				
Data output		USB port as an option (USB2.0), Ethernet interface as an option (10BASE-T, 100BASE-TX)				

1: Belt speeds other than those listed above are available as options. Contact our sales representatives for details.
2: Sum total of product weight on the conveyor. Feed capacity may vary according to the belt speed.
3: Specify one of these power supplies for use when ordering.
4: Please use the rated voltage for the power supply voltage.
A rise of a temperature in the motor may occur when the variation width of the power supply voltage is large.
Conveyor torque may deteriorate when the power supply voltage is low.
Note: The shape (length, width, and height) of products to be inspected varies with the rejector type.
Note: The noise level of the metal detectors does not exceed 70 dB (A).

For tall products

Vertically long aperture

Pass height: 280 mm

KDB3005AHFT / AHWT

Maximum pass width: 70 mm

KDB3008AHFT / AHWT

Maximum pass width: 100 mm

KDB3012AHFT / AHWT

Maximum pass width: 140 mm

KDB3015AHFT / AHWT

Maximum pass width: 170 mm

KDB3018AHFT / AHWT

Maximum pass width: 200 mm

External Dimensions

Non-Waterproof Waterproof

KDB3005AHFT
KDB3005AHWT
KDB3008AHFT
KDB3008AHWT
KDB3012AHFT
KDB3012AHWT
KDB3015AHFT
KDB3015AHWT
KDB3018AHFT
KDB3018AHWT

Model	W1	W2	W3	W4
KDB3005AHFT / AHWT	70	50	336	586
KDB3008AHFT / AHWT	100	80	351	601
KDB3012AHFT / AHWT	140	120	371	621
KDB3015AHFT / AHWT	170	150	386	636
KDB3018AHFT / AHWT	200	180	401	651

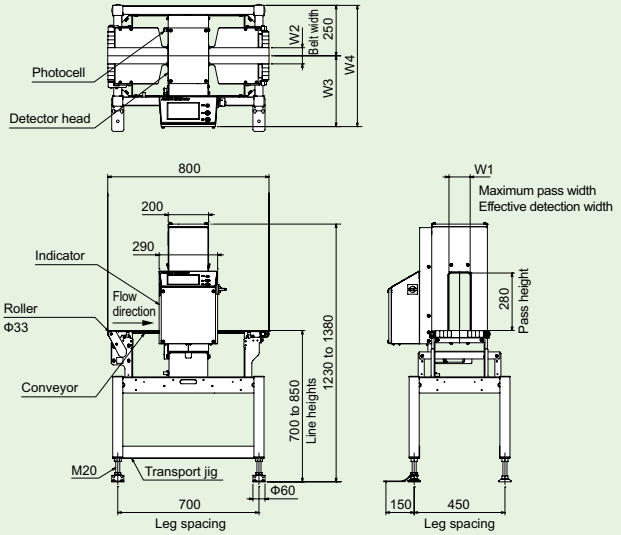

Specifications

Model	Non-Waterproof	KDB3005AHFT	KDB3008AHFT	KDB3012AHFT	KDB3015AHFT	KDB3018AHFT
	Waterproof	KDB3005AHWT	KDB3008AHWT	KDB3012AHWT	KDB3015AHWT	KDB3018AHWT
Pass height		280 mm				
Maximum pass width		70 mm	100 mm	140 mm	170 mm	200 mm
Belt width		50 mm	80 mm	120 mm	150 mm	180 mm
Display		7-inch color TFT LCD				
Operation method		Touch panel (Start, Stop, and Home are direct push buttons)				
Preset memory		Maximum 200				
Product packaging		Both general and aluminum-evaporated-packaging products				
Detection method		Simultaneous 2-frequency magnetization detection method				
Belt speed [1]		25 m/min (50 Hz), 30 m/min (60 Hz)				
Maximum product weight [2]		15 kg				
Metal detection		Rejection signal output and beep, or belt stop and beep				
Power supply [3, 4]		100 Vac, single phase 50/60 Hz ; 110/115/120 Vac, single phase 60 Hz ; 200 Vac, single phase 50/60 Hz ; 220/230 Vac, single phase 50/60 Hz ; or 240 Vac, single phase 50 Hz				
Power consumption		160 VA, rush current 50 A (typ.) (20 ms or less)				
Mass		84 kg	83 kg	86 kg	88 kg	89 kg
Environmental conditions		0 to 40°C, relative humidity 30 to 85%, non-condensing				
Protection class		AHFT type: IP30 compliance / AHWT type: IP66 compliance				
Exterior		Indicator and detector head: stainless steel (SUS304) Conveyor frame and stand AHFT type: metal (coating) / AHWT type: stainless steel (SUS304)				
Data output		USB port as an option (USB2.0), Ethernet interface as an option (10BASE-T, 100BASE-TX)				

1: Belt speeds other than those listed above are available as options. Contact our sales representatives for details.
2: Sum total of product weight on the conveyor. Feed capacity may vary according to the belt speed.
3: Specify one of these power supplies for use when ordering.
4: Please use the rated voltage for the power supply voltage.
A rise of a temperature in the motor may occur when the variation width of the power supply voltage is large.
Conveyor torque may deteriorate when the power supply voltage is low.
Note: The shape (length, width, and height) of products to be inspected varies with the rejector type.
Note: The noise level of the metal detectors does not exceed 70 dB (A).

For tall products

Vertically long aperture

Pass height: 430 mm

KDB4510AHFT / AHWT

Maximum pass width: 120 mm

KDB4513AHFT / AHWT

Maximum pass width: 150 mm

KDB4515AHFT / AHWT

Maximum pass width: 170 mm

KDB4518AHFT / AHWT

Maximum pass width: 200 mm

External Dimensions

Non-Waterproof Waterproof

KDB4510AHFT
KDB4510AHWT
KDB4513AHFT
KDB4513AHWT
KDB4515AHFT
KDB4515AHWT
KDB4518AHFT
KDB4518AHWT

Model	W1	W2	W3	W4
KDB4510AHFT / AHWT	120	100	361	611
KDB4513AHFT / AHWT	150	130	376	626
KDB4515AHFT / AHWT	170	150	386	636
KDB4518AHFT / AHWT	200	180	401	651

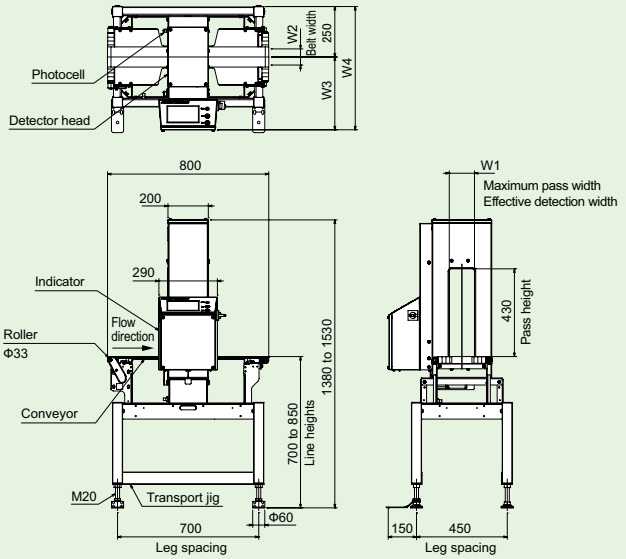

Units：mm

Specifications

Model	Non-Waterproof	KDB4510AHFT	KDB4513AHFT	KDB4515AHFT	KDB4518AHFT
	Waterproof	KDB4510AHWT	KDB4513AHWT	KDB4515AHWT	KDB4518AHWT
Pass height		430 mm			
Maximum pass width		120 mm	150 mm	170 mm	200 mm
Belt width		100 mm	130 mm	150 mm	180 mm
Display		7-inch color TFT LCD			
Operation method		Touch panel (Start, Stop, and Home are direct push buttons)			
Preset memory		Maximum 200			
Product packaging		Both general and aluminum-evaporated-packaging products			
Detection method		Simultaneous 2-frequency magnetization detection method			
Belt speed [1]		25 m/min (50 Hz), 30 m/min (60 Hz)			
Maximum product weight [2]		15 kg			
Metal detection		Rejection signal output and beep, or belt stop and beep			
Power supply [3, 4]		100 Vac, single phase 50/60 Hz ; 110/115/120 Vac, single phase 60 Hz ; 200 Vac, single phase 50/60 Hz ; 220/230 Vac, single phase 50/60 Hz ; or 240 Vac, single phase 50 Hz			
Power consumption		160 VA, rush current 50 A (typ.) (20 ms or less)			
Mass		94 kg	95 kg	97 kg	98 kg
Environmental conditions		0 to 40°C, relative humidity 30 to 85%, non-condensing			
Protection class		AHFT type: IP30 compliance / AHWT type: IP66 compliance			
Exterior		Indicator and detector head: stainless steel (SUS304) Conveyor frame and stand AHFT type: metal (coating) / AHWT type: stainless steel (SUS304)			
Data output		USB port as an option (USB2.0), Ethernet interface as an option (10BASE-T, 100BASE-TX)			

1: Belt speeds other than those listed above are available as options. Contact our sales representatives for details.
2: Sum total of product weight on the conveyor. Feed capacity may vary according to the belt speed.
3: Specify one of these power supplies for use when ordering.
4: Please use the rated voltage for the power supply voltage.
A rise of a temperature in the motor may occur when the variation width of the power supply voltage is large.
Conveyor torque may deteriorate when the power supply voltage is low.
Note: The shape (length, width, and height) of products to be inspected varies with the rejector type.
Note: The noise level of the metal detectors does not exceed 70 dB (A).

Anritsu envision : ensure

ANRITSU INFIVIS CO., LTD.

International Sales Department
5-1-1 Onna, Atsugi-shi, Kanagawa-Prf., 243-0032, JAPAN
TEL: +81-46-296-6699 FAX: +81-46-225-8387
http: //www.anritsu-infivis.com/en/

© ANRITSU INFIVIS CO., LTD. 2014

ISO14001 CERTIFICATE No.JQA-EM0210
ISO 9001 CERTIFICATE No.JQA-0316

CE

Anritsu Industrial Solutions (Shanghai) Co., Ltd.
3F, No.55, Lane 1505, Zuchongzhi Road, Zhangjiang Hi-tech Park, Pudong New Area, Shanghai 201203, P.R.China
TEL: +86-21-5046-3066 FAX: +86-21-5046-3068

ANRITSU INFIVIS (THAILAND) CO., LTD.
700/678 Moo 1, Amata Nakorn Industrial Estate, T. Pangthong A. Pangthong Chonburi Province Thailand 20160
TEL: +66 38-447180 FAX: +66 38-447182

ANRITSU INFIVIS LTD.
200 Capability Green Luton LU1 3LU, United Kingdom
TEL: +44(0)1582-433227 FAX: +44(0)1582-731303

ANRITSU INFIVIS INC.
1001 Cambridge Drive. Elk Grove Village, IL 60007-2453, U.S.A.
TEL: +1-847-419-9729 FAX: +1-847-537-8266

- Some products shown in this catalog may not be available in your country or region. Contact our sales representatives for details.
- To ensure proper operation, read the Operation Manual before using the machine.
- In addition to daily inspection, a full maintenance inspection should be completed annually.

Specifications are subject to change without notice.
No part of this catalog may be reproduced without our permission.

Printed on Recycled Paper

CAT. NO. K3229-D-1

2016-6 10 (ddc) Printed in Japan