MTB-5000 Paging System

Central Paging System for Off-shore, Plant and Crane.
Page/Party function with In-outdoor and Hazardous Area



- General Description

Talk Back System enables free broadcasting and telecommunication in a particular area such as deck and machinery areas in the offshore or plant. All substations can be connected to the PAGA and the PABX system as well. Substations include four types: flush, wall waterproof and explosion-proof types, all of which can be interfaced to the Horn/Bell/Flashing Light, and the Foot Switch. This system has the function for both call in all and call in group and of the automatic switch of power for the main and the emergency situations. The system was tested at eh IEC60945 standard and approved for CE.

- Regulations

1. IEC 60079-0 (Explosive atmospheres 0: Equip. general requirements)
2. IEC 60079-1 (Explosive atmospheres 1: Equipment protection by flameproof enclosures)
3. IEC 60945 (Maritime navigation and radio communication equipment)
4. ISO 9001 (DNV Management System Certificate)

- Functions

1. Max 45 Sub-station, Interface with PA, PABX, external telephone trunk and I.S. System
2. Dry Contact Output Function for Horn, Bell, Flashing Light at Sub-Station
3. All/Group Call and Priority Function (Preset Assigned)
4. Main/Emergency Power Source Change Automatically

- Electric Specifications: Main Amplifier Unit

1. Power Output: 250W/500W/1000W, etc.
2. Frequency Characteristics: less than 6dB(300 ~ 10kHz)
3. Input Sensitivity: more than -36dBm
4. Distortion Ratio: less than 5%
5. S/N Ratio: more than 50 dB
6. Source of Power: AC100/240V(50/60Hz), DC24V
7. Power Consumption: Max. 20A, 250W (DC 24V)
   : Max. 2.5A, 250W (AC 220V)
8. Input Fuse: AC 30A, DC 30A (in case of 250W)
9. Operating Temperature Range: -15℃ ~ +55℃
10. Operating Humidity: less than 90%



Gooseneck Mic.



Flush Station



30W Ex Speaker



10W Ex Speaker



Main Cabinet



W.T Speaker



W.T Speaker



Ceiling Speaker



W.T Handset St.



Ex Handset St.



Mic

ISO 9001 & OHSAS 18001 Certified, for more information, visit www.mrckorea.com.

www.mrckorea.com

This document contains proprietary information and may not be copied, reproduced, or utilized in anyway, in all or in part without written permission from Marine Radio Co., Ltd. Copyright © 2014 Marine Radio Co., Ltd. All rights reserved.

MTB-5000 Paging System

Central Paging System for Off-shore, Plant and Crane.
Page/Party function with In-outdoor and Hazardous Area

- Priority of Broadcasting

This system is operated in the following order (This can be changed by demands.)

1. 1st : Microphone in the external public address system
2. 2nd : Remote station microphone broadcasting
3. 3rd : Main Microphone
4. 4th : Substation

- Talk Back System Interface with PA

As the upper diagram, the system is connected with PA.

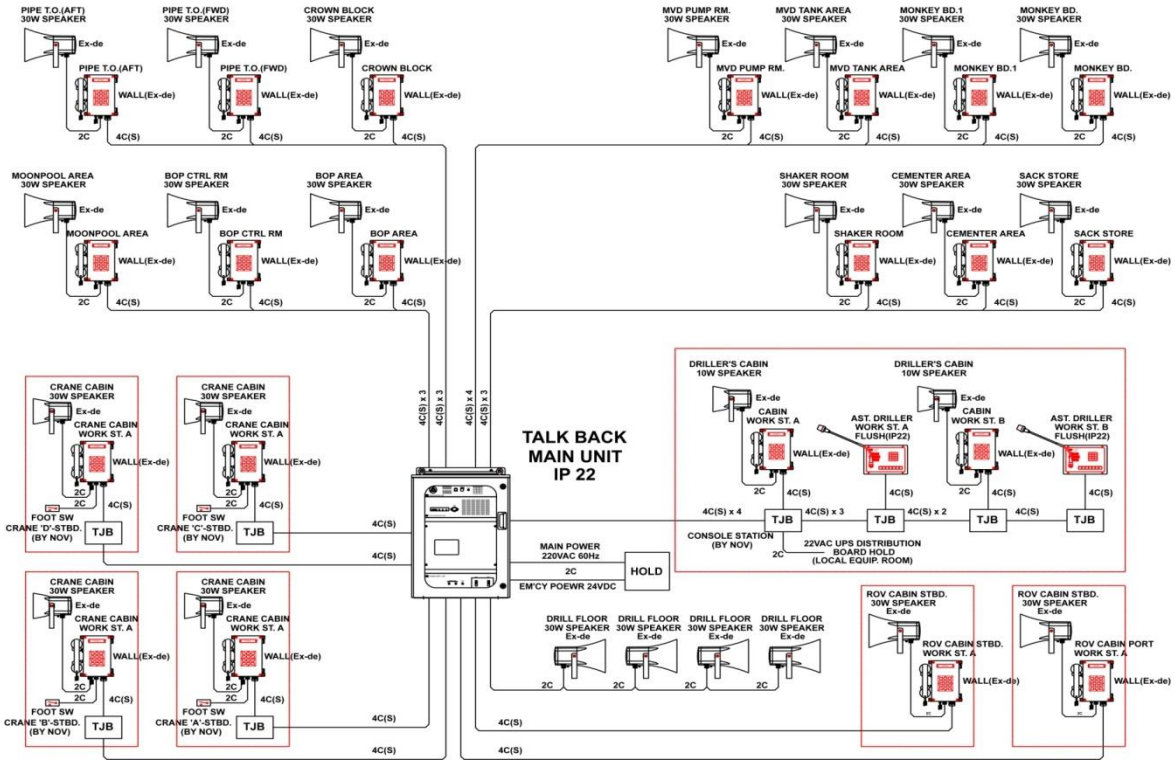

Talk Back/Paging System for Plant

Agent of MRC

Headquarters

MRC (Marine Radio Co., Ltd.)

1. Address: 6-19, Namhangseo-ro, Yeongdo-gu, Busan, Korea
2. Tel: +82-51-414-7891~7
3. Fax: +82-51-413-2604
4. Zip Code: 606-033
5. Homepage: www.mrckorea.com,
6. E-Mail: verygood@mrckorea.com

ISO 9001 & OHSAS 18001 Certified, for more information, visit www.mrckorea.com.

This document contains proprietary information and may not be copied, reproduced, or utilized in anyway, in all or in part without written permission from Marine Radio Co., Ltd. Copyright © 2014 Marine Radio Co., Ltd. All rights reserved.