CCR2

CONSTANT CURRENT REGULATOR



CCR 2 : MICROPROCESSOR CONSTANT CURRENT REGULATOR

Compliance with standards

ICAO : Aerodrome Design Manual Part 5
IEC : 61822
FAA : AC 150/5345-10, L-829
K S : KS W 5091(Korean Standard)

The YCR 5000 CCR2 has been specially developed for use in airfield lighting series circuits taking into account specific requirements and for reliability, accuracy and ease of maintenance. The YCR 5000 CCR2 is a simple and sturdy unit benefiting from the long experience of Youyang in the aviation field. This means compact construction and easy adaptation to operational demands as well as to individual demands for special features.

Features

- Free Standing Unit
- Housing divided into three areas: electronic control, low voltage and high voltage
- Natural Air Cooled
- Operating Temperature Range 0 to + 55°C
- Output Current : 6.6 or 20 Amps (1, 3 , 5 or 7 steps) option : Non Illumination step
- Rating from 4 to 30 KW
- Dual line serial remote control
- Output Current Regulation ±1.0%
- Efficiency: not less than 90%
- Open Circuit Protection
- Input power loss monitoring
- Earth fault monitoring
- Elapsed time monitoring
- Local Control
- Parallel remote control
- Power factor: not less than 90%
- Over Current Protection
- Regulation error monitoring
- Lamp fault monitoring
- V1, I1, V2, I2, VA2 monitoring



YOUYANG
AIRPORT LIGHTING EQUIPMENT INC.

CCR2

MICROPROCESSOR CONSTANT CURRENT REGULATOR



Brief Specifications

Description	Specification
Type	Thyristor Phase Control
Ratings	4, 5, 7,5, 10, 15, 20, 25, 30 KW
Input Voltage	Single Phase 208V, 220V or 380V 50/60Hz (Other voltages upon request)
Output Current	6,6 A max (20 Amp upon request)
Brightness Step	7 Adjustable steps (1, 3, 5 or 7 step) Option: Non illumination step 1,8A
Accuracy	All step: within ±1%
Power Factor	> 90% at nominal input and full load
Efficiency Control	> 90% at nominal input and full load
Remote Control	Parallel: 24 VDC to 60 VDC Serial: RS-485 Dual line
Protection	Over current protection I2 = 6.85A < 4 sec / I2 = 6.93A < 2 sec I2 = 7.10A < 1 sec / I2 = 8.30A < 0.3 sec Open circuit protection I_2 = 1.50A <1 sec
Monitoring	Over current monitoring Open circuit monitoring Fuse fault monitoring Current regulation error monitoring Input power loss monitoring Output V-A Drop monitoring Lamp fault monitoring Earth fault monitoring V1, I1, V2, I2, VA2 monitoring Elapsed time monitoring
Ventilation	Natural air cooled
Temperature	0 to + 55°C Operating range
Humidity	10 ~ 95 % Operating range
Altitude	0 to 2000 m. above sea level

Unit : mm

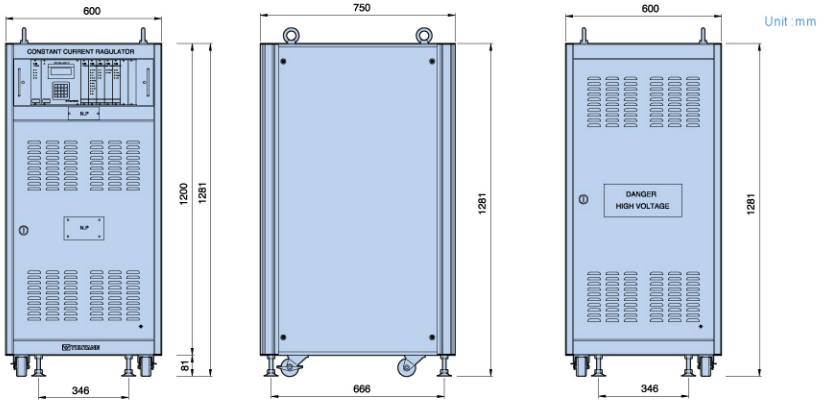

Component

Control Section



High Voltage Section



Low Voltage Part



● CONTROL SECTION

This section constitutes the control and monitoring system of the Constant Current Regulator using a micro processor. All settings and controls are made through a key pad and the actual values of the CCR are presented on a LCD display and through LED indicators.The main components of the Control Section are as follows;

- Power supply module
- CPU & control module(included key pad & LCD module)
- Thyristor drive module
- Monitor module
- Communication module - option
- Lamp fault module - option
- Earth fault module - option
- Circuit selector switch - option
- Control power transformer

● HIGH VOLTAGE SECTION

The High Voltage Section supplies current to the series circuit and its main components are as follows;

- Output transformer
- Current transformer
- Potential transformer
- Lighting arrester
- Output terminal
- Coupling choke

● LOW VOLTAGE SECTION

The Low Voltage Section receives the input from the Control Section and executes the phase control through the thyristor It supplies power to the output transformer The main components of the low voltage part are as follows;

- Circuit Breaker
- Power Relay
- Magnet Contact
- Thyristor module
- Input choke
- Thyristor drive board

Block Diagram

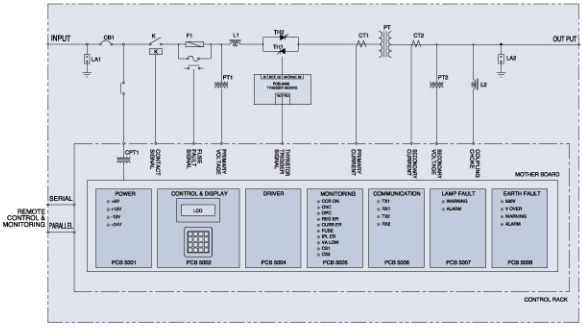

Output Current

6.6A				20A
1 Step	3 Step	5 Step	7 Step	5 Step
1:6.6A	3:6.6A	5:6.6A	7:6.6A	5:20A
	2:5.5A	4:5.2A	6:6.4A	4:15.8A
	1:4.8A	3:4.1A	5:5.2A	3:12.4A
		2:3.4A	4:4.1A	2:10.3A
		1:2.8A	3:3.4A	1:8.5A
			2:2.8A	
			1:2.2A	

Non illumination step : 1.8A (option)

CCR2

CONSTANT CURRENT REGULATOR

Ordering Code

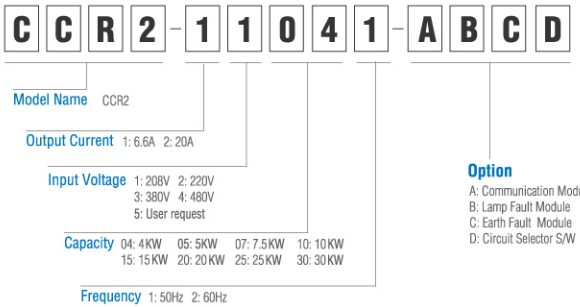

Description

Model Name	Item	Specification
CCR 2	Constant Current Regulator(L-829)	4KW~30KW

Spare Parts

Description	Specification	Ordering code
Power Board	PCB-5001	122-008H
CPU Board	PCB-5002	122-0081
Drive board	PCB-5004	122-008A
Monitor board	PCB-5005	122-008B
Comm board	PCB-5006	122-008C
LFM board	PCB-5007	122-008D
EFM board	PCB-5008	122-008E
Trans board	PCB-5009	122-008G
Mother board	PCB-5010	122-008F
CSM board	PCB-5011	122-008J
Trigger board	PCB-3406	122-006A

Description	Specification	Ordering code
Thyristor	1,600V 80A	125-081A
Thyristor	1,600V 150A	125-007A
Thyristor	1,600V 350A	125-079A
Fuse	SIBA202804-40A	126-380D
Fuse	SIBA202804-50A	126-380C
Fuse	SIBA202804-80A	126-380A
Fuse	SIBA202804-100A	126-380B
Fuse	SIBA202804-160A	126-380E
Fuse	SIBA202804-200A	126-380F
Fuse	250V 4A	126-379A

YOUYANG
AIRPORT LIGHTING EQUIPMENT INC.

Head Office
738-2, Kwanyang-Dong, Dongan-Ku,
Anyang city, Kyunggi-Do, Korea
Tel : 82-31-422-0021 Fax : 82-31-424-6044
http://www.youyang.co.kr E-mail: youyang@youyang.co.kr

※ Specifications and features in this catalogue are subject to change. FEB 1. 2005 SEOUL