EVERDIGM ROCKY 24

EVERDIGM Rocky 24 hammer is a general purpose hammer suitable at wide range of air pressures. The hammer has few parts than other hammer allowing an easy maintenance and servicing.

Operation is suitable at air pressure of 87-246.5 psi (6-17 bar).
Recommended Drilling diameters is 610-813mm (24-32”).

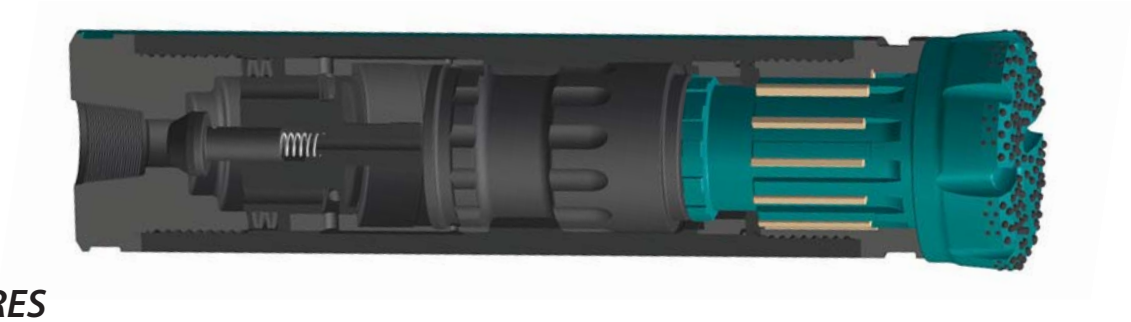

FEATURES

UPPER CHAMBER
Optimized cylinder chamber providing maximum hammer stroke and high impact power.

PISTON DESIGN
Lubricate Groove reducing frictional heat and improving reliability.
Robust Simple piston design for strength and performance.

DOWN CHAMBER
Efficient chamber volumes and cycle timing to give optimised performance.

CHUCK
Intermediate frequency induction heating offering extra protection against wear and fatigue.

BIT
Quality forged material providing outstanding performance and durability.



TECHNICAL SPECIFICATION

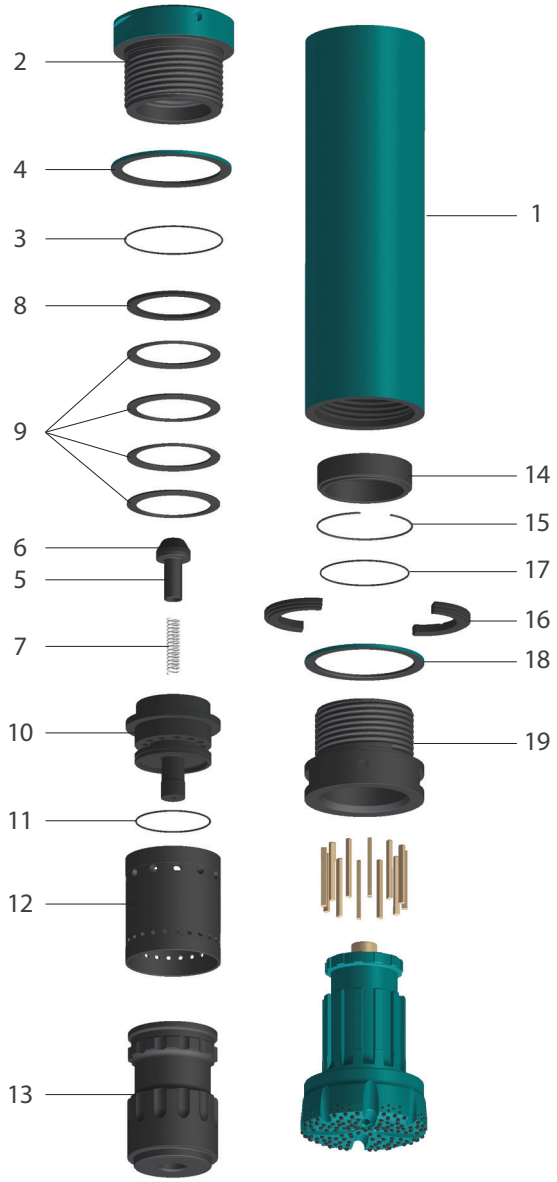

PARTS LIST

ITEM	DESCRIPTION	N240 Part NO.	EA
0	HAMMER	RT410-0166	1
1	WEAR SLEEVE	RT410-0167	1
2	BACK HEAD	RT410-0168	1
3	O-RING	S8134621	1
4	WEAR RING	RT410-0169	1
5	CHECK VALVE	RT410-0170	1
6	CHECK COVER	RT410-0171	1
7	COIL SPRING	RT410-0189	1
8	WSHER	RT410-0172	1
9	DISC SPRING	RT410-0173	4
10	AIR DISTRIBUTOR	RT410-0174	1
11	O-RING	S8134541	1
12	CYLINDER	RT410-0175	1
13	PISTON	RT410-0176	1
14	BUSHING	RT410-0177	1
15	PISTON RETAIN RING	RT410-0178	1
16	BIT RETAIN RING	RT410-0179	1
17	O-RING	S8134601	1
18	WEAR RING	RT410-0180	1
19	CHUCK	RT410-0181	1
	[SERVICE KIT] Order Code :	EDH24 N240 SK	
1	WEAR SLEEVE		
2	BACK HEAD		
16	BIT RETAIN RING		
19	CHUCK		
3	O-RING		
17	O-RING		
18	WEAR RING		

GENERAL SPECIFICATION

Shank	N240	
Backhead Thread	8 5/8 A.P.I. 4N PIN	
Outside Diameter	525mm	20.66”
Length	2,030mm	79.92”
Piston Weight	463 kg	1020.7 lb
Total Weight Approx	2534 kg	5586.5 lb
Bit Size	610-813mm	24-32”