www.autoflow.co.kr

VORTEX



VORTEX FLOWMETER

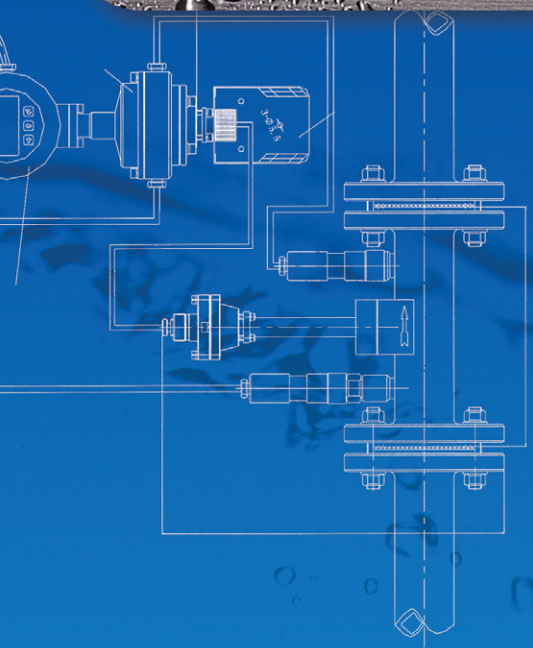

유량계 전문제작/판매

(株) 오토후로

1. Summary

1.1 Application

Vortex Flowmeter is one of the most widely used flow measurement devices in the world at present. It has been widely used in petroleum|, chemical industry, heating power, metallurgy, electric power, pharmacy, textile process, dyeing and printing industry as well as municipal administration and environmental protection engineeing to measure and control flow or heat quantity of the gas (e.g. air, oxygen, nitrogen, natural gas, coal gas)and liquid (e.g :water, ethyl, low-viscosity oils, drink, condiment and chemical fluid), and steam (e.g. saturation steam, overheated steam).

1.2 Working Principle

Vortex Flowmeter is a kind of fluid oscillating meter, working in the theory of "Karman Vortex". The vortex separate frequency which is proportional to the flow is tested by using a piezoelectric ceramics element, and converted to an alternate electric charge signal. After the alternate electric charge signal treated by the electric circuit, this flowmeter can output a voltage frequency signal,or indicate flow, or output a 4-20mA DC standard signal which is proportional to the flow, or output cumulate total pulse signal ,or communicate with a computer.

1.3 Technical Data

Table 1 Technical Data

Nominal Diameter (mm)	15,20,25,32,40,50,65,80,100,125,150,200,250,300, (300~1000 available in Insertion-type)
Connective types	Grip-mounting,Flange,Thread,Insertion-type, Integration-type, Separation-type,Temperature and Pressure Compensation Type, Explosion-Proof Type
Working Pressure (MPa)	0.6, 1.0,1.6, 2.5, 4.0, 6.4,10.0, 16.0, 25.0
Medium Temperature (℃)	-40~150, -40~250, -40~350
Body Material	1Cr18Ni9Ti, 316, 316L
Accuracy	±1%R, ±1.5%R, ±1%FS; Insertion-type: ±2.5%R, ±2.5%FS
Ratio of Qmax and Qmin	6~20
PowerSupply	3.6V lithium Cell, 5V DC, 12V DC, 24V DC(Standard)
Output Signal	Square Wave Pulse: Up Level ≥0.7 x Voltage; Low Level≤ 1V (No output when using cell) Current:4~20mA, Tow-wire system,Three-wire System. Voltage:1~5V Three-wire System Communication: RS485,HART on agreement
Pressure Drop Coefficient	Conform to JB/T9249-1999 Standard, Cd ≤ 2.4
Explosion-proof Mark	Flame-proof enclosure : ExdIICT5,
Protection Class	IP65
Ambient Condition	Temperature:- 20℃~55℃ Relative Humidity:5%-90% Barometric Pressure :86-106kPa
Application Medium	Gas ,Liquid , Stream
Transmitting Distance	Sensor :up tp 4km. Tow-wire system : Load≤ 750 Ω

2 Select meter size and mounting design according to the working conditions

2.1.Setting the application flow range

The nominal diameter of the flowmeter should be selected according to the measurement range.The measurement ranges of different size flowmeters are not equal. Even when the same size used in different meduim, their measuring ranges are different also. The application flow range can be obtained by caculating.

2.1.1 Setting the flow range of gas

2,1,1.1 Application flow range of gas under ordinary conditions

Table 2 Application flow range of air under ordinary conditions

Nominal diameter (mm)	Measuriing Range (m^3/h)	Output frenquency Range (Hz)	Illustration
15	3.2~22	295~2030	1.Ordinary condition:
20	5.7~39	228~1560	medium temp.-3~35℃
25	8.8~60	176~1200	pressure:101.335-~107.325. kPa.
32	14.5~87	144~863	note: standard barometric
40	22.6~150	113~750	Pressure:101.325.
50	35~240	92~632	
65	60~390	70~460	2.300~1000mm listed in
80	90~600	57~385	this table are availlable in
100	140~930	44~297	Insertion-type.
125	220~1450	37~244	
150	320~2000	32~200	
200	570~3500	23~141	
250	880~5300	18~110	
300	1270~7630	15~92	
(300)	1270~7640	75~449	
(400)	2260~13570	75~450	
(500)	3530~21200	75~450	
(600)	5090~30530	75~450	
(800)	9050~54280	75~450	
(1000)	14140~84820	75~452	
〉(1000)	Upon agreement		

2.1.1.2 Application flow range under working conditions If the gas to be measured is not air under ordinary conditions as 2 .1.1 1mentioned. The flow range will change along with the working conditions. The application flow measuring range suitable for the working conditions should be caculated according to the steps in table 3. (Usually the max. flow of Vortex Flowmeter needn't account. For the min. flow is influenced by the medium density and running vicosity, therefore the detemining of woking flow range is actually to determine the min.flow.).

Table 3 Caculating steps for the min. flow and flow range under working conditions

Step 1

Figure out the min. flow Qρ under the working density according to the formula (1)

$$Q\rho = Q_0 \times \sqrt{\rho_0 / \rho} \quad \cdots\cdots (1)$$

Where : Qρ stands for the applicable min. flow of the flowmeter under the working density. Q0 stand for the min flow of the flowmeters appointed in table2 and 5 suitble for air and water under ordinary conditions ,ρ represents the medium working density. ρ_0 means the density of 20℃ air under the standard pressure is 1.205kg/m^3. Water density ρ_0= 1000kg/m^3

The bigger the medium density is, the lower the min.flow of the meter will be.

Step 2

Figure out the min. flow Qs under the working running vicosity according to the formula (2)

$$Qs = Q_0 \times \nu / \nu_0 \quad \cdots\cdots (2)$$

Where: Qs stands for the applicable min. flow of the flowmeter under the working running vicosity. Q0stands for the min. flow of the flowmeters in table2 and 5 for air and water under ordinary conditions .V is the working running vicosity of the medium to be measured.V0 means the running vicosity of 20℃ air under the standard pressure is 15 m^2/s. The running vicosity of water is 1m^2/s. The bigger the running vicosity is, the higher the applicable min. flow will be.

Step 3

Compare Qρ and Q s , when Q s 〉 Qρ, the applicable flow range is from Qs to Qmax., when Qs 〈 Qp. the applicable flow range is from Qρ to Qmax.. Qmax..is the applicable upper limit flow appointed in table2 and 5.

The density of the medium under working conditions is given in the technique parameter usually.

if the density of the medium under standard conditions(0.101325 MPa, 0℃) is known. the density under working conditions can also be caculated by the following formula (3)

$$\rho = \rho n \times \frac{0.101325 + P}{0.101325} \times \frac{273.15}{273.15 + T} \quad \cdots\cdots (3)$$

Where: ρ : The density of the medium under working conditions

ρ n : The density of the medium under standard conditions. (Density of gas in common use under the standard conditions see Table 4)

P : Working pressure(MPa),

T : Working temperature(℃)

Table 4 Density of gas in common use under the standard conditions

Name	Density (kg/m^3)	Name	Density (kg/m^3)
air (dry)	1. 2928	nitrogen dioxide	2. 0550
nitrogen	1. 2506	ethyne	1. 1717
oxygen	1. 4289	ethylene	1. 2604
argon	1. 7840	propylene	1. 9140
neon	0. 9000	methane	0. 7167
ammonia	0. 7710	ethane	1. 3567
hydrogen	0. 08988	propane	2. 0050
carbon monoxide	1. 2504	butane	2. 7030
carbon dioxide	1. 9770	natural gas	0. 8280
nitrogen monoxide	1. 3401	coal gas	0. 8020

The conversion of the medium power vicosity_η (PaS) and its running vicosity υ (m^2/S) see formula (4)

$$\upsilon = \frac{\eta}{\rho} \quad \cdots\cdots (4)$$

The vicosity of the medium is influenced by temperature and pressure.User can get the medium vicosity in the technique parameter .

2.1.1.3 Convert the volume flow under standard conditions to that under working conditions

If The measuring unit of gas is standard cubic meter/hour(Nm3/h) under standard conditions (0.101325 MPa absolute pressure , 0℃).Please Convert the volume flow under standard conditions to that under working conditions(m3/h) according to formula (5).Then compare it with the flow range in table 2.

$Q \approx Qn \times [\ 0.1 \times (\ t + 273.15\ )\ ] \div [\ 273.15 \times (\ P + 0.1\ )\ ]$ ..... (5)

If user take 20℃,0.10132MPa as standard conditions, the volume flow under working conditions should be caculated by formula (6).

$Q \approx Q20 \times [\ 0.1 \times (\ t + 273.15)\ ] \div [\ 293.15 \times (\ P + 0.1\ )\ ]$ ..... (6)

Where : Q : The flow under working conditions(m3/h)

Qn : The flow under standard conditions (0.101325 MPa absolute pressure , 0℃) (Nm3/h)

Q20 The flow under standard conditions (0.101325 MPa absolute pressure , 20℃) (Hm3/h)

t : working temperature(℃)

P ; working pressure(MPa),

2.1.1.4 Convert the mass flow Qm (kg/h) to volume flow Qv (m^3/h) as formula (7)

$$QV = \frac{Qm}{\rho} \quad \text{..... (7)}$$

Where : ρ : The densityof the meduim under working conditions (kg/m^3)

After caculating, compare Qv with the flow range in table 2and table5.

2,1.2 Setting the application flow range of liquid:

The application flow range of liquid refer to table5.

2.1.3 Setting the application flow range of steam

When the meduim is steam, the mass flow unit (ton/hour or kilogram/hour) is often used. The application flow range of saturation water steam refer to table 6. Correction coefficient and the application flow range of overheated steam refer to table 7.

2. 2 Setting the diameter of the flowmeter

2,2.1 First find out the working condition, check agaist the pressure, temprature, density , vicosity , flow range of the medium and the measuring unit to be used carefully. Especially confirm the min.flow according to the technique design data and the .actual working conditions.

2.2.2 According to the formula (1) and (2), caculate the flow range correspoding with the measured medium.Then,check whether this flow range of the flowmeter has completely included that of the actul medium.If not,refer to table 2 and 5 ,selecte the applicable size of the flowmeter and caculate the flow range again untll the flow range of the flowmeter has completely included that of the medium to be measured..

2.2.3 The technique parameter of the actul flow range is standard cubic meter (Nm^3/h), so the conversion to the flow range (m^3/h) under the working conditions should be done first according to the formula (5) or (6) and then confirm the flowmeter size according to item 2.2 .2

2.2.4 Select the meter size according to table2 and5 directly, when the medium is air or water under ordinary conditions.

2.2.5 Select the meter size according to table 6 directly for saturation steam .

2.2.6 Multiply the correction coefficient in tabble 7 by the data in table 6. The product is used to select the meter size from table 6.

2.2.7 If the flow range of the actual medium is wholly within that of two flowmeters which are different in size ,the smaller one should be chosen to guard aginst a possibility that the Qmin.of the medium may be lower than that of the flowmeter.

Table 5. applicable flow range of liquid

Nominal diameter (mm)	Measuriing Range (m3/h)	Output frequency Range (Hz)	Illustration
15	0.34~3.8	31~350	1. 300~1000mm flowmeters are of insertion type..
20	0.6~6.8	24~272	2. Measuring conditions : Water temperature: t = 20℃; Density p0=1000kg/m^3.
25	0.94~10.6	19~212	3, if the measured liquid is not water and its density and vicosity have been known, caculate the suitble the lower limit accoding to the formula (1) and (2) and determine the flow range by Item 1.1.2.
32	1.45~17	14~173	4. When caculate the lower limit of the measured liquid under different density, take ρ_0 = 1000kg/m^3.
40	2.4~27	12~135	5. Vortex Flowmeter is not suitble for high vicosity liquid.If the caculation result dose not meet the technique requisition, the other type flowmeter shoul be taken into account.
50	3.8~42	10~112.5	
65	6.3~72	7.6~87	
80	10~130	6.4~83	
100	20~200	6.3~63	
125	30~300	5~50	
150	45~450	4.5~45	
200	80~800	3.2~32	
250	125~1250	2.5~25	
300	180~1800	2~20	
(300)	130~780	7.3~43.7	
(400)	230~1380	7.2~43	
(500)	360~2160	7.3~44	
(600)	520~3120	7.3~43.7	
(800)	920~5520	7~42	
(1000)	1440~8640	7~41	
〉1000	Upon agreement		

2. 3 Mouning design for the flowmeter and pipeline

2.3.1 Basic installation requirement

(1) Vortex Flowmeters can be installed indoor or outdoor, it should be kept away from high–voltage cable, revolving or strongly oscillating equipments,poisonous and harmful environment and ambiet temperature and humidity must be conformed to the requirements of the flowmeter. Mounting place should be safe and easy to install˙adjust and maintain the flowmeter.

(2) The surrounding space of the flowmeter should be big enough for people to mount,adjust and repair it.

(3) Flowmeters can be installed horizontally or vertically, even sloply. But when the medium is liquid, the direction of liquid flowing must be from botton to top in order to ensure the pipeline full of liquid.

(4) The inner diameter of the pipeline should be the same with that of the flowmeter, if not, the Pipeline reducing should be done in upstream and downstream.of the flowmeter.

(5) The straight pipes in inlet and oulet of the flowmeter should be provided by user. The length of straight pipes changes along with the patten of the pipeline in upstream and downstream˚ The shortest length of inlet straight pipe refer to table 8.

(6)The adjust valve and half-opened valve should not be mounted in the upstream of the flowmeter in order to assure the accuracy and steady of the flowmeter.They can be installed in downstream beyond 5DN (DN means the nominal diameter of the flowmeter)

(7) The requirements of straight pipe for insertion- type vortex flowmeter refer to table 8.

(8)If the medium temperature is lower than 150 ℃, choose integral-type its circuit and sensor are made into an organic whole. If the medium temperature is over 150 ℃ or ambiet temperature and humidity are very high, choose separation-type its amplifier or transducer can be munted away from sensor or transmitter within 4m. Fix the sensor or transmitter on the wall or a self-provided holder with three M5 bolts .Construction and mounting dimension of separation-type see fig 1

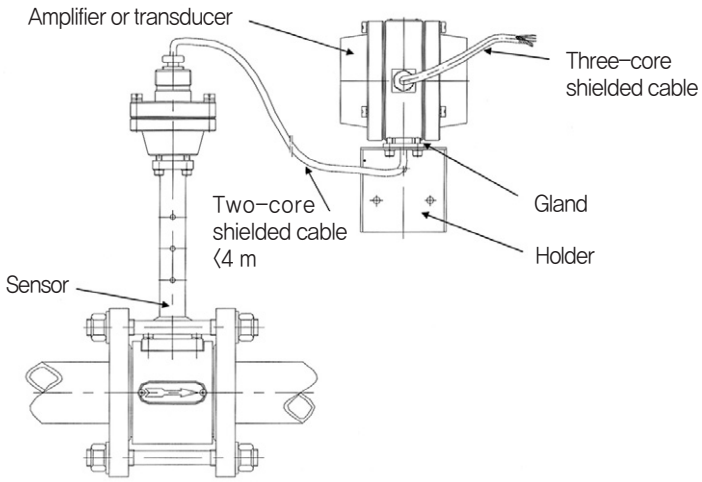

Fig 1 Construction and Mounting Dimensions of Separation-type

2.3.2 LU˙LUGB series flange grip-mounting and flange connecting type flowmeter mounting dimension

LU,LUGB series flange grip-mounting and flange connecting type vortex flowmeter mounting dimension (see Table 9 and Fig2, Fig3, Fig4)

Flange,double-screw bolt,nut, gasket,joint washer for grip-mounting type flowmeter are provided with the flowmeter.Generally,the material of joint washer is asbest rubber, flange is A3. Special materials required from users are available upon agreement.The materials name and brand should be specified in ordering.

Flanges of flange mounting type vortex flowmeter adopt convex surface design, so the concave surface pipe flanges should be provided by user which in conformity with the following standards :

GB9115.2-2000, GB9116.2-2000, ≤ DN200 4Mpa ; 〉DN200 1.6, 2.5Mpa

Pressure and temperature transmitters will be used, when the measured medium is gas. If users need them, we would like to form a whole set for user as specitified in ordering.

2.3.3 Uninterrupted insertion-type flowmeter mounting dimension

Uninterrupted insertion-type flowmeter mounting dimension (see Fig 5 and table 10)

2.3.4 Interruptive Insertion-type flowmeter mounting dimension

Interruptive Insertion-type flowmeter mounting construction(see Fig 6)

2.3.5Signal transmitting wire：

Using three-core shielded cable, transmitting distance of the flowmeter can be up to 4000m. A cable is configured normal with the 20 meter when delivery.

Two-wire system flowmeters adopt two-core shielded cable.For their transmitting distance, load resistance 〈750Ω should be taken into account. This cable should be keep away from high-voltage wire and do not run with power cable side by side closely..

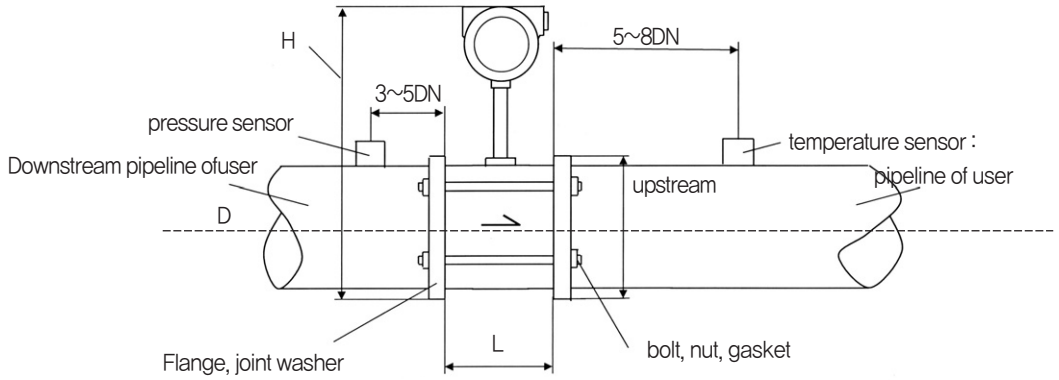

Fig2 flange grip- Flowmeter mounting diagram

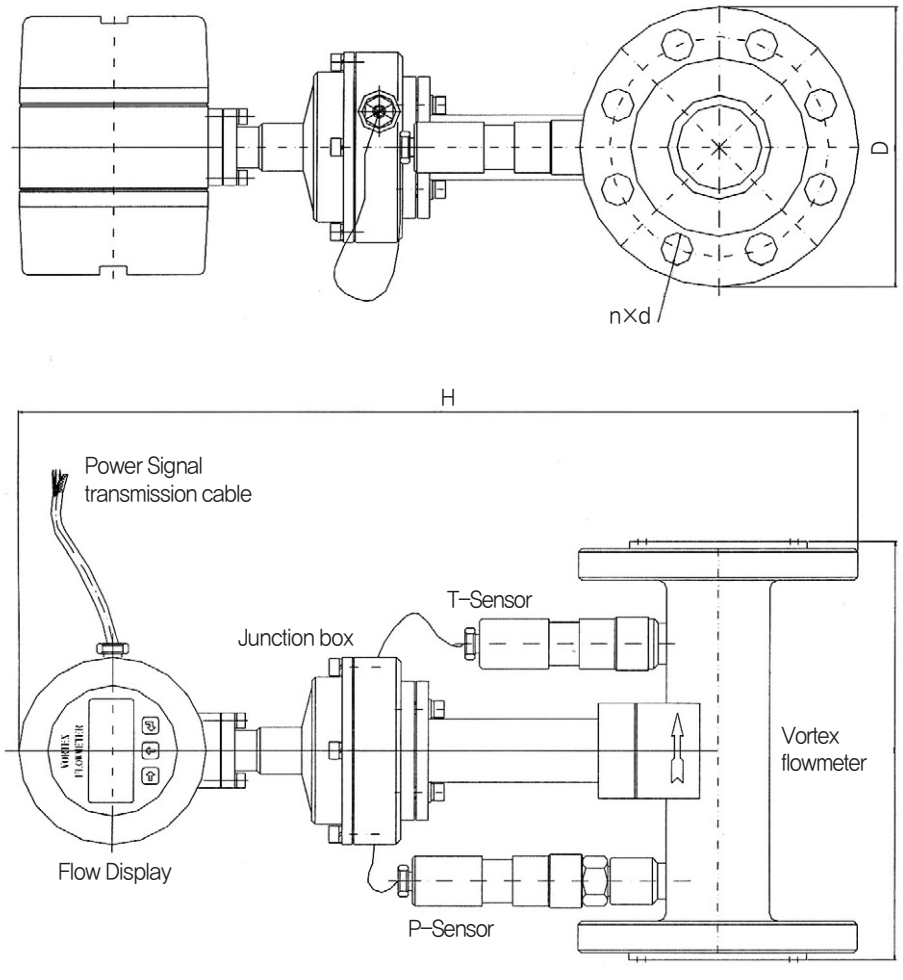

Fig.3 Mounting diagram of Integration flange type II flowmeter

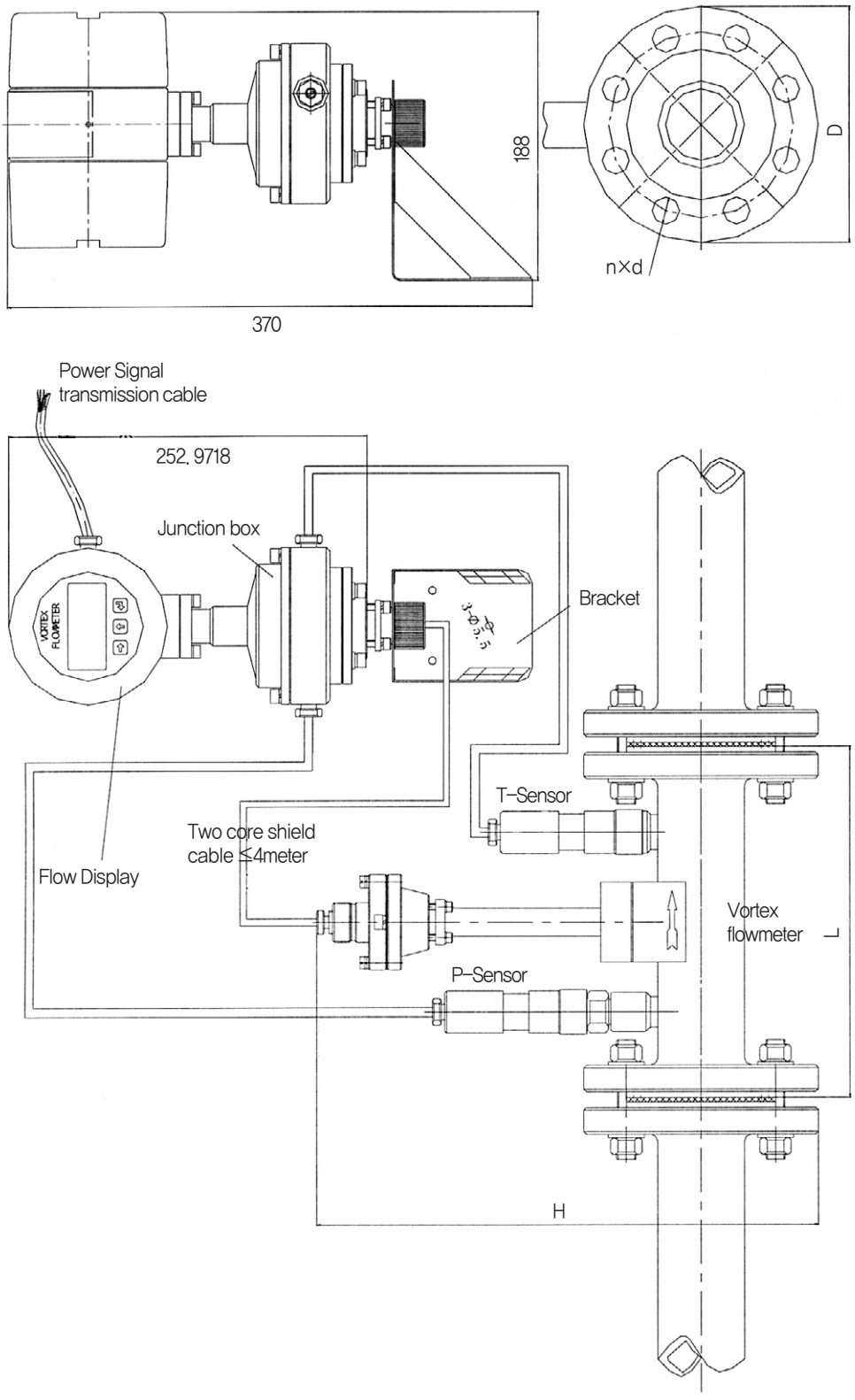

Fig.4 Mounting diagram of Separation flange type II flowmeter

Table 8 Upstream straight pipe diagram

straight pipe pattern	straight pipe length	straight pipe pattern	straight pipe length
Concentric shrinkage full-opened valve	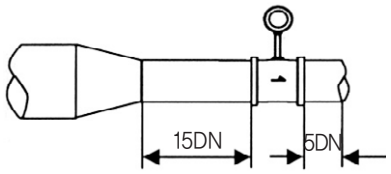	A right angle elbow pipe	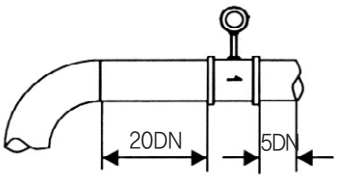
Two right angl elbow pipe in same plane	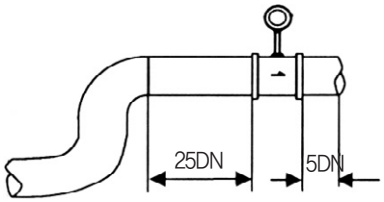	Two right angle lbow pipe in different plane	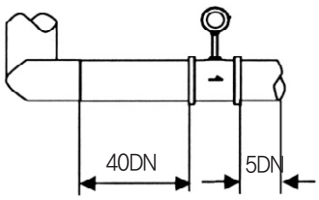
Concentric expanding-pipe	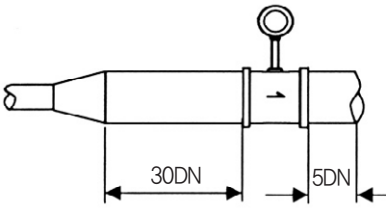	adjust valve and half-opened valve (unrecommend)	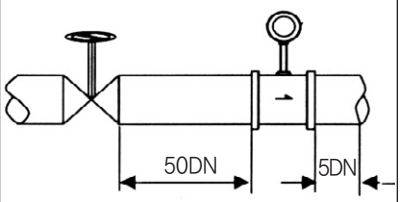

Table 9 LU,LUGB series mounting dimensions

dimension \ Diameter		DN 15	DN 20	DN 25	DN 32	DN 40	DN 50	DN 65	DN 80	DN 100	DN 125	DN 150	DN 200	DN 250	DN 300
flange grip-mounting	L	57	57	57	57	75	75	75	75	90	90	110	150	180	210
	D	95	105	115	140	150	165	185	200	235	270	300	375	450	515
	H	380	385	390	403	408	415	425	435	450	470	485	520	560	595
Flange typel	L	135	135	135	135	150	150	150	150	160	180	180	250	250	280
	D	95	105	115	140	150	165	185	200	235	270	300	375	450	515
	H	460	465	470	483	488	495	505	515	530	550	565	600	640	675
Flange type II	L	250	250	250	250	250	250	250	250	250	250	250	280	300	300
	D	95	105	115	140	150	165	185	200	235	270	300	375	450	515
	H	460	465	470	483	488	495	505	515	530	550	565	600	640	675
Separation flange type II	L	250	250	250	250	250	250	250	250	250	250	250	280	300	300
	D	95	105	115	140	150	165	185	200	235	270	300	375	450	515
	H	360	365	370	383	388	395	405	415	430	450	465	500	540	575
n×d		4×12	4×12	4×12	4×12	4×16	4×16	6×20	8×16	8×20	8×24	8×24	12×27	12×30	16×30
Note		Base on 4MPa											Base On 1.6MPa		

Notes : 1. Flange type I without a temperature and pressure sensor :
Flange type II with a temperature or pressure sensor :
2. "L" is the distance between the two flanges.

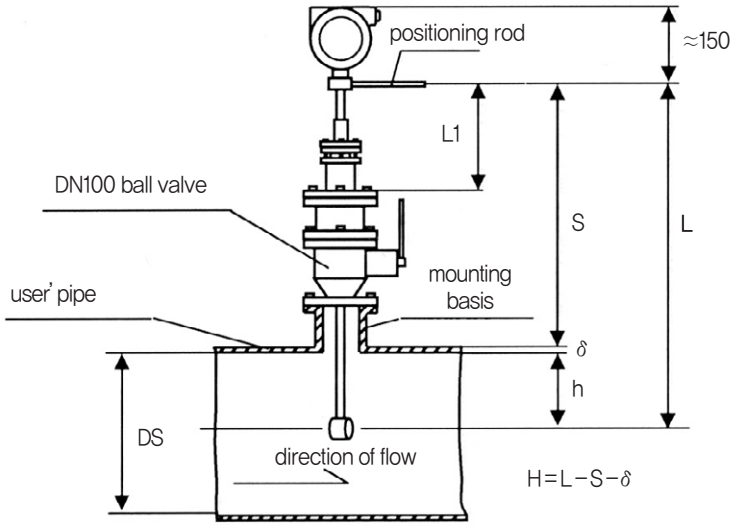

Fig.5 Mounting diagram of uninterrupted insertion-type flowmeter

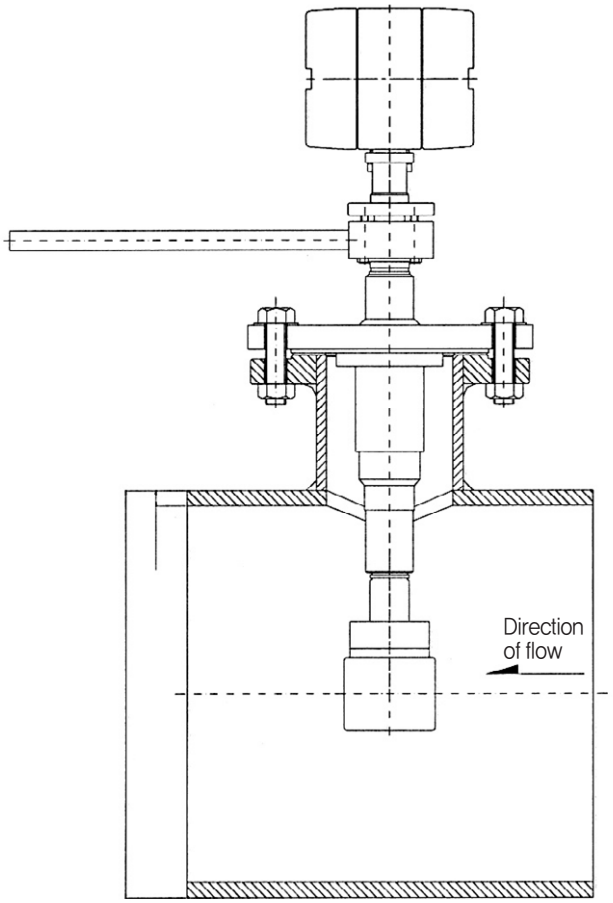

Fig.6 Mounting diagram of interruptive insertion-type flowmeter

In which : L ····· Length of insertion rod
L1 ····· Spare inspect dimensions
S ····· The distance between the centre of positioning rod and the highest point of the pipe out wall.
h ····· Insertion depth
δ ····· Wall thickness of pipe
DS ····· Inside diameter of user' pipe

Table10 Mounting dimensions of uninterrupted inseration–type flowmeter

Nominal Dianeter DN (mm)	Inside diameter range of measured pipe DS(mm)	Lengh of integration rod L(mm)	Integration depth h
300	>240~340	930	0.5 x DS
400	>340~440		
500	>440~540	1130	
600	>540~680		
800	>680~880	1330	
1000	>880~1050		
Stainless steel anchorage clip(1Cr18Ni9Ti) Bolt 16x65 Nut M 16 Gasket, 16 Joint washer		8 pcs 8 pcs 8 pcs 1 pcs	
Attachment		Quantity	
1. Ballvalve : TypeQ41D–16(PN1.6,DN100) Material : 2Cr13 valve rod : 2Cr13. If users do not have special requirements in ordering, supply this part together with sensor, but pack them separately.		1 pcs Note : Interruptive insertion–type flowmeter dose not need it. (see Fig 4)	
2. Mounting basis (A3 or 1Cr18Ni9Ti, PN 1.0,DN100,GB9123.3) This part needs ordering independently. The external diameter and wall thickness of pipe, name and brand of material should be given ,if need.		1 pcs	

2.3.6 The external diameter´ wall thickness ´name and brand of material of the pipe should be given ,when order interruptive insertion–type flowmeters.

3 Type Selection

3.1 Order Notice

* Check pressure, temperature, density, flow range of the measured medium and the measurement unit to be used carefully .

* Perform the caculating of the applicable flow range which is corresponding to the actual medium, especially caculate the lower limit according to the working conditions and the technique parameter. On this besis, confirm the size of the flowmeter.

* Select a proper place to mount the flowmeter where is big enough for the straight pipelines.

* Fill in the consulting form seriously (see attached list 1).

★ 본 카다로그에 기재된 사양, 외형, 치수는 제품 개발을 위하여 변경 될 수 있습니다.