Class III / PI-k*



▲ PI-k8



▲ PI-k16



▲ PI-k32

- ● 고주파 필터내장 직렬형 SPD / 동작 상태 표시 기능
- ○ High-frequency filter built-in serial-type SPD / Indicators for fault and Power

Technical data

Model		PI-k*		
Electrical characteristics		PI-k8	PI-k16	PI-k32
Nominal operating voltage	U_n	24 / 32 / 48 / 110V DC		
Max. continuous operating voltage	U_c	28.6 / 38.4 / 57.6 / 132V DC		
Nominal current	I_N	8A	16A	32A
Nominal discharge current (8/20)	I_n(L/N, L/PE)		3kA	
	I_n(N/PE)		5kA	
Combined impulse	U_{oc}(L/N, L/PE)		6kV	
	U_{oc}(N/PE)		10kV	
Voltage protection level at I_{in}	U_p(L/N)		〈850V	
	U_p(L/PE)		〈1.5kV	
	U_p(N/PE)		〈1.2kV	
Asymmetrical attenuation of filter (band-stop filter)			min80dB at 4MHz min40dB (0.15~30MHz)	
Filters constants	Cx	150nF	220nF	220nF
	Cy	22nF	22nF	22nF
	L	1.2mH	1.8mH	2.3mH
Response time	t_A(L/N)		〈25ns	
	t_A(L/PE, N/PE)		〈100ns	
Power loss at winding temp. 20℃		〈2.2W	〈3.5W	〈4W
Recommended backup fuse		8A	16A	32A
Lifetime			min. 100.000 h	

PI–k8

Dimension

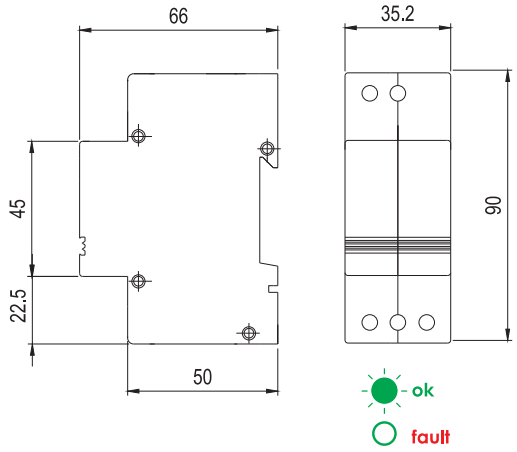

Internal configuration

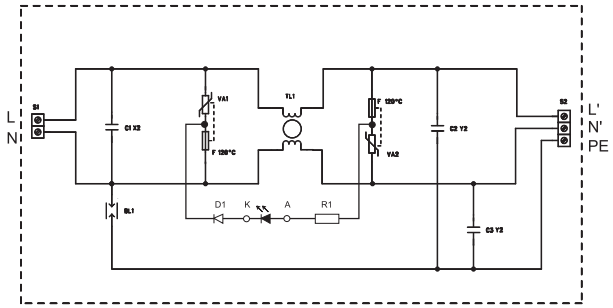

PI–k16

Dimension

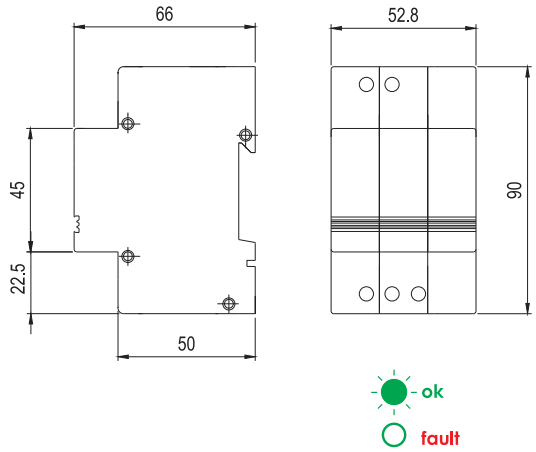

Internal configuration

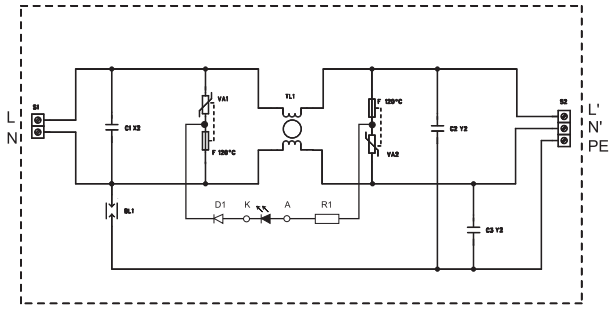

PI–k32

Dimension

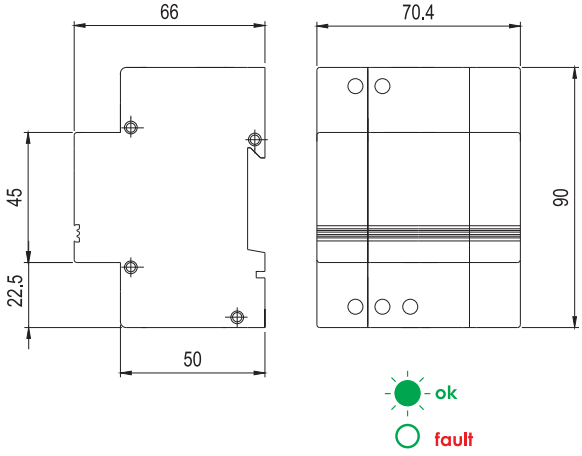

Internal configuration

