Severe Service Ball Valves for Special Application

BF/BT/BR/BD/BL/BX-Series. BS-Series

Floating Ball / Trunnion Ball / Top Entry Ball

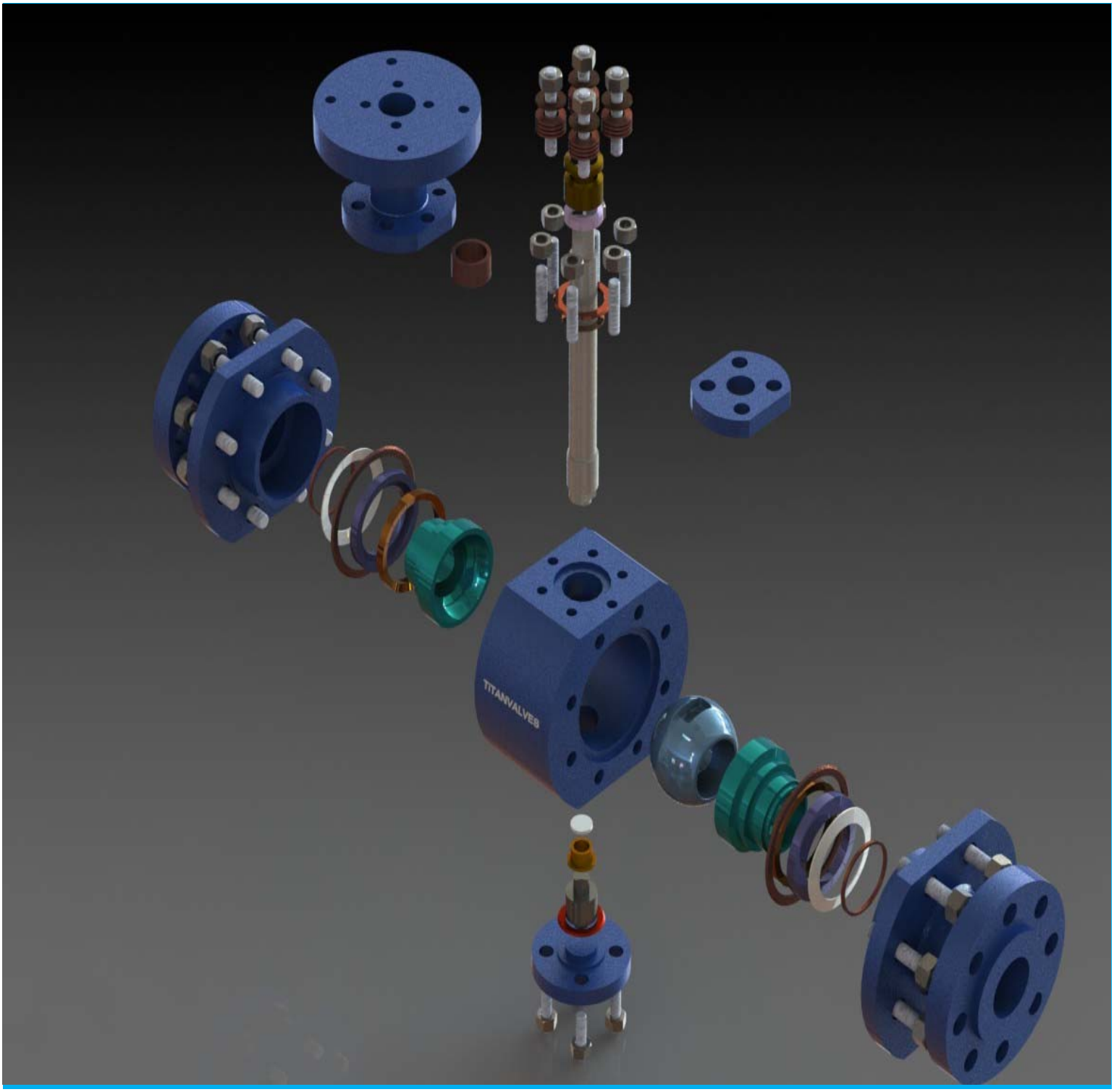

BFS provodes solutions to keep up with the demends of the thermal power plant

BFS metal seat ball valves are designed to meet virtuallyany process condition. Our standard class valves are available from 15mm (1/2") to 1050mm (42") sizes, up to ANSI pressure 4500# (special class vqlves available in all ANSI ratings) and are manufactured in a variety of forged materials and end connections to meet the plant specifications.

BFS Metal-seat-Ball-Valves Seat Leakage standard is **ZERO**, with our 4-years-Leakage-Guarantee. So our valves will decrease heat loss in power plant, reduced maintenance costs and downtime and increase plant availability.

CONTENTS

Introduction ---------- 2

C.V.D Treatment (Hard Coating/Penatration) & Design Concept ---------- 3

ERB / Electro-Relife-Ball Valve ---------- 4

Type of Ball Valves ---------- 5

Selection Guide & Parts List ---------- 6

Dimension ---------- 7

Detail Model Numbering System ---------- 8

Model Numbering System

1	2	3	4	5
1. Body Series	**2. Body Type**	**3. Seat Type**	**4. Body Option**	**5. Actuator Type**
BF / Floating	**1P** / 1-piece	**SS** / Soft seat	**00 /** Nobody Option	**CD** / Double cylinder
BT / Trunnion	**2P** / 2-piece	**MS** / Metal seat	**JK /** Jacket Body	**CS** / Spring cylinder
BR / ERV	**3P** / 3piece	**RT** / EPDM+TFE	**CS** / Cryogenic	**EM** / Electric motor
BD / DBB	**TE** / Top Entry	**XX** / Option	**VD /** C.V.D Treat.	**HS** / Hydraulic
BS / Custom Eng.			**LL** / Live Loading	**LH** / Lever handle
BL / 3-way			**LB**/ Lining Body	**GH** / Gear box
BX / 4-way			**XX** / Others Option	**XX** / others option



Using CVD treatment to improve the wear life of metal Seat & Ball.

CVD / Chemical Vapor Deposition(Penatration)

This is not for a simple coating on the material surface but for a surface penetration. So, CVD treated material has no flaking which usually takes place in the coated material such as in Chrome-Carbide and Tungsten-Carbide etc.

CVD is a thermo-chemical surface treatment in which metal atoms is diffused into the surface of work-piece to from CVD layer with the base material. CVD has been proven to more than several the wear life of metal parts that were previously chrome-carbide and tungsten carbide coating, carburized, nitride, nitro-carburized or hard chrome plated in numerous applications.

Excellent wear resistance from surface of 1,700 to 2300HV achieved on steel and nickel, cobalt based alloys, chrome carbide, tungsten carbide. Hardness retained at high service temperature 650deg.C and CVD increase acid corrosion resistance for hydrochloric and phosphoric acids in particular.

DESIGN

Live-Loaded Gland Packing for Low Emission.

The accurate machining of stem and bonnet sealing areas of BFS trunnion mounted ball valves assures the compliance with the regulations relevant to the so called emission free valve.

- Guarantees zero stem emissions & Reduces maintenance.
- Eliminates routine gland adjustments.

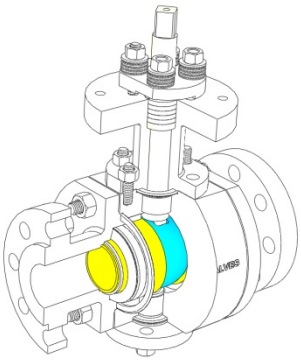

Live loading Packing System

Integral Seat

Eliminates any potential of leakage between a loose seat and the valve body.

- No body-to-seat joint
- CVD treatment seat or Chrome carbide, Tungsten carbide.

Anti Blow-out Stem

Stem body joint is designed to assure anti-blow-out condition of the stem. Non Pinned & Inserted internally when the valve is assemble.

Metal Seat Leakage Testing Standard

Every valve testing standard has an acceptable leakage rate; this includes ANSI FCI 70-2 Class V&VI, MSS-SP-61 and API-598, the three most applied standards. There are two things that the test standards have in common.

Based on standard specifications we can see how BFS. Metal Seated Ball Valves far exceed the competition with ***zero-leakage***.

- Standard zero leakage four-years warranty; one year warranty on high-cycle application (1cycle per day, 365days per year)
-

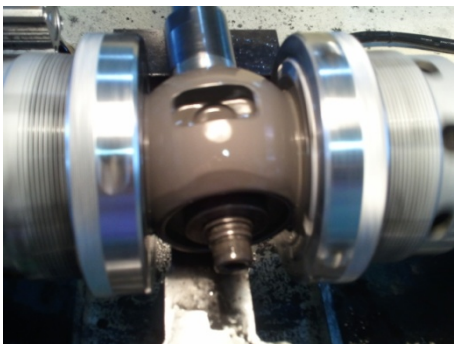

CVD Treated Ball & Seat

ERV / Electronic-Relief-Ball Valve

BR-series

The BR-series 2-Piece ball valve is designed to provide automatic or manual over-pressure protection for steam boiler system, and can also be used to assist start-up and shut-down venting.

Set to operate at a lower pressure than the spring-loaded safety valves, the ERB substantially.

reduces safety valve maintenance and increase boiler efficiency. The ERB should be sized as part of the safety valve boiler package in order to ensure safe performance.

Technologically advanced ball & seat CVD treated increase life expectancy.

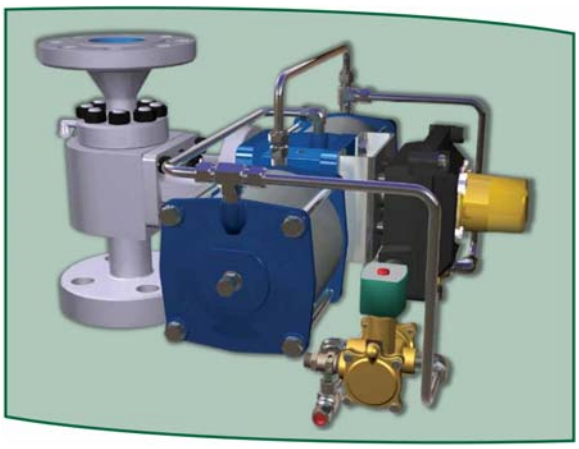

ERV with Standard Control Package

Control Package

Several items have been added to the control package. The mechanical-limit-switch box is an explosion proof aluminum enclosure and is equipped and a high visibility monitor for resistant recognition of valve position up to distance of 150ft (45.72m). The solenoid valves are mounted directly onto the position monitor housing. This package has the option of adding additional switches should a customer want to send a valve position signal to his DCS or other remote location.

System Component

The ERV is usually mounted on the super heater outlet header, the controller close to the boiler and control station on the boiler control panel box. The ERV is normally set at a pressure lower than the spring-loaded safety valves where it can substantially reduce safety valve maintenance & improve boiler efficiency.

Complete ERB

ERB is an automatic, power actuated, pressure relief and venting valve. A double acting air actuator is the standard actuation package. The estimated (open to close) cyclic action is 2-seconds)

Controller

The standard control package consists of a dual control pressure switch comprised of a pressure switch that actuates two micro switches and a heavy duty relay switch. When the predetermined set point of the valve is reached, the relay switch closes and transmits electric current to two three-way solenoid valves located on the actuation package. With the solenoid valves energized, the ERB opens. When the pressure decrease below the adjusted closing point of the valve, the relay opens which de-energizes the solenoid valves and causes the ERV to close.

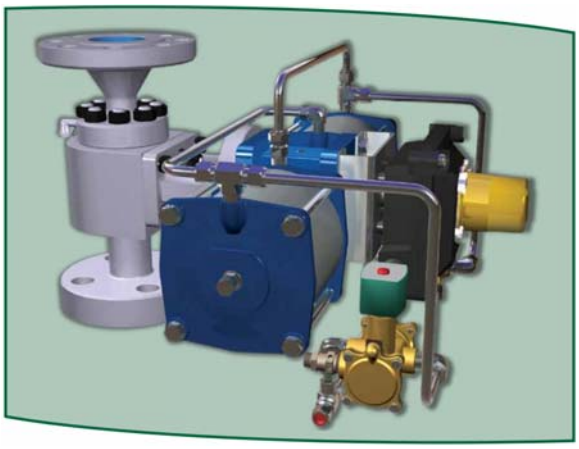

Complete ERV

BF1P-series / 1-Piece floating Ball Valve

Our traditional Power plant application ball valve is now available in a new body style that takes advantage of the time proven internal components of the original power plant valves but incorporates a more stream lined body design. By using forged steel for the bodies, BFS power plant application ball valves may be made from a wide variety of materials and options to meet our customer's constantly changing requirements.

- Sizes : 15mm(1/2") to 65mm(2-1/2")
- Rating : ANSI-600/900/1500/2500#
- End connection : SW/BW/RF/RTJ/Etc.
- Live loading gland packing system.
- Body Materials : A105/F11/F22/F91. Etc.



BF2P-series Pattern

BT3P-series / 3-Piece Trunnion Ball Valve

The BT-series ball valve is field repairable, true bi-directional-sealing and trunnion mounted.

Smaller actuator can be used because of the trunnion design. Less cost is incurred by the end user because the valve can be easily repaired in line and fewer inventory parts are required. It is inheren -tly by-directional and economical solution for a strong, heavy duty block and bleed or isolation valve.

- Sizes : 1-1/2" to 36"
- Rating : ANSI-150 to 4500#
- Connection : RF/RTJ/SW/BW/Etc.
- Materials : CS, Alloy, Stainless steel. Monel. Hastelloy. Duplex, Titanium, Inconel, Etc.



BF1P-series Pattern / Top Entry

BF2P-series / 2-Piece Floating Ball Valve

Our two piece power plant application ball valve features a forged body, integral seat, and the same high quality materials used in our previous designs. The one piece stem allows for more accurate positioning of the ball than two piece stems generally offer, a critical feature for consistent sealing. These types of valves have been a popular solution for those customers who desire a valve with an integral downstream seat without the alignment problems inherent with a two piece stem.

- Sizes : 1/2" to 4"
- Ratings : ANSI-600/900/1500/2500/4500#
- End Connection : SW/BW/RF/RTJ/Etc
- Live loading gland packing system
- Materials : A105/F11/F22/F91/Etc.



BT3P-series Pattern

DIMENSIONS OF VALVES TO ASME

CLASS 150 unit : mm

NPS	ID	OD	BCD	RF	RTJ	Dia of Bolt
1/2	13	89	60.5	108.0	–	U1/2
3/4	19	98	70.0	117.0	–	U1/2
1	25	108	79.5	127.0	140.0	U1/2
1–1/2	38	127	98.5	165.0	178.0	U1/2
2	51	152	120.5	178.0	191.0	U5/8
2–1/2	64	178	139.5	190.0	203.0	U5/8
3	76	190	152.5	203.0	216.0	U5/8
4	102	229	190.5	229.0	241.0	U5/8
5	127	254	216.0	340	–	U3/4
6	152	279	241.5	394.0	407.0	U3/4
8	203	343	298.5	547.0	470.0	U3/4
10	254	406	362.0	533.0	546.0	U7/8
12	305	483	432.0	610.0	622.0	U7/8
14	337	533	476.0	686.0	699.0	U1
16	387	597	539.5	762.0	775.0	U1
18	438	635	578.0	864.0	876.0	U1–1/8
20	489	698	635.0	914.0	927.0	U1–1/8
24	591	813	749.5	1,067.0	1,080.0	U1–1/4

CLASS 300 unit : mm

NPS	ID	OD	BCD	RF	RTJ	Dia of Bolt
1/2	13	95	66.5	140.0	151.0	U1/2
3/4	19	117	82.5	152.0	165.0	U5/8
1	25	124	89.0	165.0	178.0	U5/8
1–1/2	38	156	114.5	190.0	203.0	U3/4
2	51	165	127.0	216.0	232.0	U5/8
2–1/2	64	190	149.0	241.0	257.0	U3/4
3	76	210	168.0	283.0	298.0	U3/4
4	102	254	200.0	305.0	321.0	U3/4
5	127	279	235.0	360	–	U3/4
6	152	318	270.	403.0	419.0	U3/4
8	203	381	330.0	502.0	518.0	U7/8
10	254	444	387.5	568.0	584.0	U1
12	305	521	451.0	648.0	664.0	U1–1/8
14	337	584	514.5	762.0	778.0	U1–1/8
16	387	648	571.5	838.0	854.0	U1–1/4
18	432	711	628.5	914.0	930.0	U1–1/4
20	483	775	686.0	991.0	1,010.0	U1–1/4
24	584	914	813.0	1,143.0	1,165.0	U1–1/2

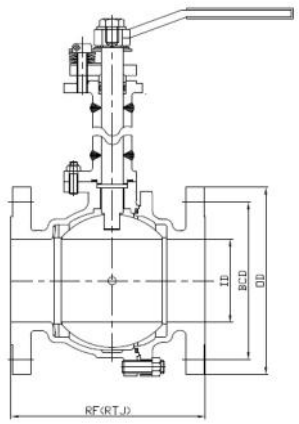

CLASS 600 unit : mm

NPS	ID	OD	BCD	RF	RTJ	Dia of Bolt
1/2	13	95	66.0	165.0	163.0	U1/2
3/4	19	117	82.5	190.0	190.0	U5/8
1	25	124	89.0	216.0	216.0	U5/8
1–1/2	38	156	114.5	241.0	241.0	U3/4
2	51	165	127.0	292.0	295.0	U5/8
2–1/2	64	190	149.0	330.0	333.0	U3/4
3	76	210	168.0	356.0	359.0	U3/4
4	102	273	216.0	432.0	435.0	U7/8
6	152	356	292.0	559.0	562.0	U1
8	200	419	349.0	660.0	664.0	U1–1/8
10	248	508	432.0	787.0	791.0	U1–1/4
12	298	559	489.0	838.0	841.0	U1–1/4
14	327	693	527.0	889.0	892.0	U1–3/8
16	375	686	603.0	991.0	994.0	U1–1/2
18	419	743	654.0	1,092.0	1,095.0	U1–5/8
20	464	813	724.0	1,194.0	1,200.0	U1–5/8
24	559	940	838.0	1,397.0	1,407.0	U1–5/8

CLASS 900 unit : mm

NPS	ID	OD	BCD	RF	RTJ	Dia of Bolt
1/2	13	121	82.5	–	–	U3/4
3/4	17	130	89.0	–	–	U3/4
1	22	149	101.5	254.0	254.0	U7/8
1–1/2	35	178	124.0	305.0	305.0	U1
2	47	216	165.0	368.0	384.0	U7/8
2–1/2	57	244	190.5	419.0	422.0	U1
3	73	241	190.5	381.0	384.0	U7/8
4	98	292	235.0	457.0	460.0	U1–1/8
6	146	381	317.5	610.0	613.0	U1–1/8
8	190	470	393.5	737.0	740.0	U1–3/8
10	238	546	470.0	838.0	841.0	U1–3/8
12	282	610	533.5	965.0	968.0	U1–3/8
14	311	641	559.0	1,029.0	1,038.0	U1–1/2
16	356	705	616.0	1,130.0	1,140.0	U1–5/8
18	400	787	686.0	1,219.0	1,232.0	U1–7/8
20	444	857	749.0	1,321.0	1,334.0	U2
24	533	1,041	901.5	1,549.0	1,568.0	U2–1/2

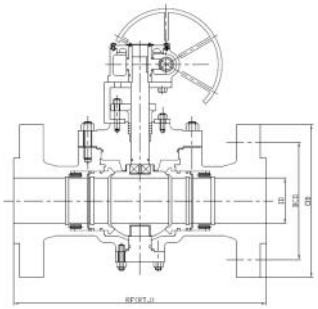

CLASS 1500 unit : mm

NPS	ID	OD	BCD	RF	RTJ	Dia of Bolt
1/2	13	121	82.5	–	–	U3/4
3/4	17	130	89.0	–	–	U3/4
1	22	149	101.5	–	–	U7/8
1–1/2	35	178	124.0	–	–	U1
2	47	216	165.0	368.0	371.0	U7/8
2–1/2	57	244	190.5	419.0	422.0	U1
3	70	267	127	470.0	473.0	U1–1/8
4	92	311	157	546.0	549.0	
6	136	394	317.5	705.0	711.0	U1–3/8
8	178	483	393.5	832.0	841.0	U1–7/8
10	222	584	482.5	991.0	1,000.0	U1–7/8
12	263	673	571.5	1,130.0	1,146.0	U2
14	289	749	635.0			U2–1/4
16	330	826	146.1			U2–3/4
18	371	914	774.5			U3
20	416	984	832.0			U3
24	498	1,163	990.5			U3–1/2

CLASS 2500 unit : mm

NPS	ID	OD	BCD	RF	RTJ	Dia of Bolt
1/2						
3/4						
1						
1–1/2						
2	38	235	171.5	451.0	454.0	U1
2–1/2	47	267	197	508.0	514.0	U1–1/8
3	57	305	127	578.0	584.0	U1–1/4
4	73	356	273	673.0	683.0	U1–1/2
6	111	483	368.5	914.0	927.0	U2
8	146	552	438	–	–	U2
10	184	673	540	–	–	U2–1/2
12	219	762	619	–	–	U2–3/4
14						
16						
18						
20						
24						

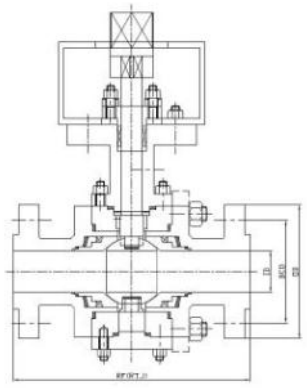

DIMENSIONS OF FLANGES TO JIS B2210 & B1511

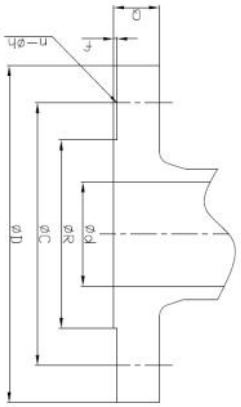



unit:mm

unit:mm

Nominal Bore Size (mm)	10 kg/㎠								20 kg/㎠							
	Dim. of Flanges				Base Drilling			Dia. of Bolt	Dim.of Flanges				Base Drilling			Dia. of Bolt
	OD	(Q)	(f)	OD of Raised Face.R	BCD	No.of Bolts	Dia (h)		OD	(Q)	(f)	OD of Raised Face.R	BCD	No.of Bolts	Dia (h)	
10	90	12	1	46	65	4	15	M12	90	14	1	46	65	4	15	M12
15	95	12	1	51	70	4	15	M12	95	14	1	51	70	4	15	M12
20	100	14	1	56	75	4	15	M12	100	16	1	56	75	4	15	M12
25	125	14	1	67	90	4	19	M16	125	16	1	67	90	4	19	M16
32	135	16	2	76	100	4	19	M16	135	18	2	76	100	4	19	M16
40	140	16	2	81	105	4	19	M16	140	18	2	81	105	4	19	M16
50	155	16	2	96	120	4	19	M16	155	18	2	96	120	8	19	M16
65	175	18	2	116	140	4	19	M16	157	20	2	116	140	8	19	M16
80	185	18	2	126	150	8	19	M16	200	22	2	132	160	8	23	M20
(90)	195	18	2	136	160	8	19	M16	210	24	2	145	170	8	23	M20
100	210	18	2	151	175	8	19	M16	225	24	2	160	170	8	23	M20
125	250	20	2	182	210	8	23	M20	270	26	2	195	225	8	25	M22
150	280	22	2	212	240	8	23	M20	305	28	2	230	260	12	25	M22
(175)	305	22	2	237	265	12	23	M20								
200	330	22	2	262	290	12	23	M20	350	30	2	275	305	12	25	M22
(225)	350	22	2	282	310	12	23	M20								
250	400	24	2	324	355	12	25	M22	430	34	2	345	380	12	27	M24
300	445	24	3	368	400	16	25	M22	480	36	3	395	460	16	27	M24
350	490	26	3	413	445	16	25	M22	540	40	3	440	480	16	33	M30×3
400	560	28	3	475	510	16	27	M24	605	45	3	495	540	16	33	M30×3
450	620	30	3	530	565	20	27	M24	675	48	3	560	605	20	33	M30×3
500	675	30	3	585	620	20	27	M24	730	50	3	615	660	20	33	M30×3
(550)	745	32	3	640	680	20	33	M30	795	52	3	670	720	20	39	M36×3
600	795	32	3	690	730	24	33	M30	845	54	3	720	770	24	39	M36×3
(650)	845	34	3	740	780	24	33	M30	945	60	5	790	850	24	48	M45×3
700	905	34	3	800	840	24	33	M30	995	64	5	840	900	24	48	M45×3
(750)	970	36	3	855	900	24	33	M30	1,080	68	5	900	970	24	56	M52×3
800	1,020	36	3	905	950	28	33	M30	1,140	72	5	960	1,030	24	56	M52×3
(850)	1,070	36	3	955	1,000	28	33	M30	1,200	74	5	1,020	1,096	24	56	M52×3
900	1,120	38	3	1,005	1,050	28	33	M30	1,250	76	5	1,070	1,140	28	56	M52×3

Materials of major or parts

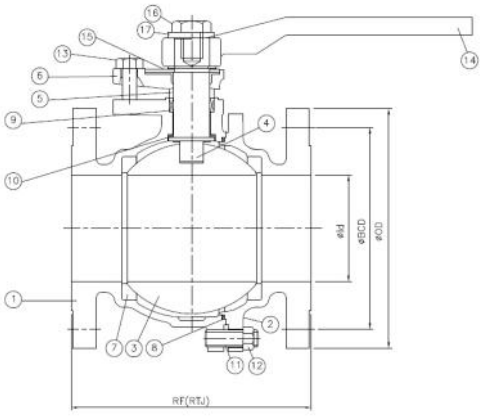

No.	PART NAME	Material
1	Body	A216 WCB
2	CAP	A216-WCB
3	BALL	A351-CF8M/A275-316
4	STEM	A276-316
5	GRAND	A276-316
6	GRAND FLANGE	A351-CF8
7	SEAT RING	RTFE
8	GASKET	SPW304+Graphite
9	GRAND PACKING	Expanded Graphite + Corrosion inhibitor
10	THRUST WASHER	PTFE
11	CAP BOLT	A193 - B7
12	CAP BOLT NUT	A194 - 2H
13	GLAND BOLT	A193-B8
14	HANDLE	A536
15	LOCKING GUIDER	A167-304
16	HANDLE BOLT	A276-304
17	WASHER	A167-304

Materials of major or parts

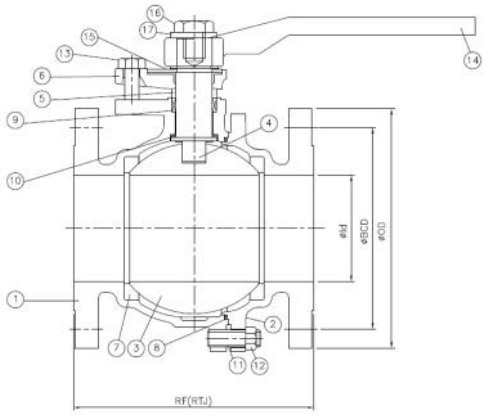

No.	PART NAME	Material
1	Body	A351- CF8M
2	CAP	A351- CF8M
3	BALL	A351-CF8M/A275-316
4	STEM	A276-316
5	GRAND	A276-316
6	GRAND FLANGE	A351-CF8
7	SEAT RING	RTFE
8	GASKET	SPW304+Graphite
9	GRAND PACKING	Expanded Graphite + Corrosion inhibitor
10	THRUST WASHER	PTFE
11	CAP BOLT	A193-B8
12	CAP BOLT NUT	A194-8
13	GLAND BOLT	A193-B8
14	HANDLE	A536
15	LOCKING GUIDER	A167-304
16	HANDLE BOLT	A276-304
17	WASHER	A167-304

HOW TO ORDER

Special Ball Valve Numbering System.

1		2		3		4		5		6
□	□	□	□	□	□	□	□	□	□	□	□

1. BODY SERIES

BF / Floating
BT / Trunnion
BR / ERB
BD / DBB
BS / Custom Eng.
BL / 3-way
BX / 4-way

2. BODY TYPE

1P / 1-piece
2P / 2-piece
3P / 3piece
TE / Top Entry

3. SEAT TYPE

SS / Soft seat
MS / Metal seat
RT / EPDM+TFE
XX / Option

4. OPTION

00 / Nobody
JK / Jacket body
CS / Cryogenic
VD / CVD Traet.
LL / Live Loading
LB / Lining Body
XX / Others option

4. ACTUATOR TYPE

CD / Double cylinder
CS / Spring cylinder
EM / Electric motor
HS / Hydraulic
LH / Lever handle
GH / Gear box
XX / Option

5. ACTUATOR SIZE

Air-Cylinder	Diaphragm	Electric Motor	Hydraulic Cylinder
04 / 100mm	D1 / 250mm	EM-series	HS-series
05 / 125mm	D2 / 290mm		
06 / 150mm	D3 / 370mm		
08 / 200mm	D4 / 480mm		
10 / 250mm	D5 / 550mm		
12 / 300mm			
14 / 350mm			
19 / 480mm			
21 / 530mm			
XX / Option			
00 / Nobody			



Severe Service Metal Seat Ball Valves

www.bfsvalve.com

BFS Incorporation
23-3, Gumdan Industrial Complex, 1655-2,
Oryu-dong, Seo-gu, Incheon Metropolitan City, Korea.
T/+82-32-329-9142. F/+82-32-329-9148
E-mail / bfsvalve@bfsvalve.com

BFS U.S.A / America headquarters
21175, Tomball, #417, Pkway, Houston, TX, 77070, U.S.A
T/+1-281-379-6070. F/+1-713-851-5572
E-mail / dbeck@bfsvalve.com

BFS Arvand / Middle East Service Center
123#, Free Zone, Arvand, Iran
T/+98-91-2507-7248. F/+98-21-8864-4670
E-mail / dfazel@bfsvalve.com