ER COLLET CHUCK

MAS403-BT



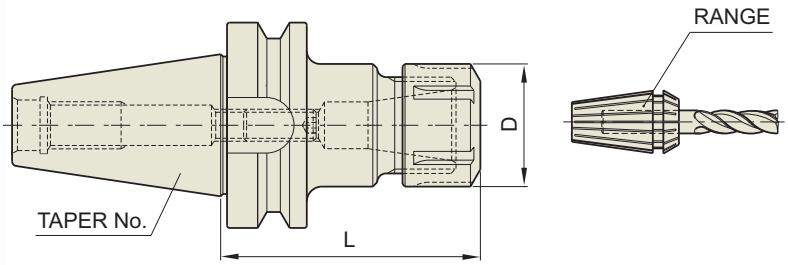

MAS403 -BT	Taper Accuracy	G Value	RPM	Coolant System
	AT3	6.3	12,000	

■ Standard type

TAPER No.	CODE No.	RANGE	D	L	M	NUT	COLLET	Weight (kg)	Stock
30	**BT30-ER11- 70**	0.5~7.0	19	70	M6	ER11	ER11+ET1-12	0.5	
	BT30-ER11-100	0.5~7.0	19	100	M6	ER11	ER11+ET1-12	0.5	
	BT30-ER16- 70	0.5~10.0	28	70	M10	ER16	ER16+ET1-16	1.0	●
	BT30-ER16-100	0.5~10.0	28	100	M10	ER16	ER16+ET1-16	1.1	●
	BT30-ER20- 80	1.0~13.0	34	80	M12	ER20	ER20+ET1-20	1.2	●
	BT30-ER20-100	1.0~13.0	34	100	M12	ER20	ER20+ET1-20	1.3	●
	BT30-ER25- 70	1.0~16.0	42	70	M12	ER25	ER25+ET1-25	1.2	●
	BT30-ER25-100	1.0~16.0	42	100	M12	ER25	ER25+ET1-25	1.3	●
	BT30-ER32- 60	2.0~20.0	50	60	M12	ER32	ER32+ET1-32	1.4	●
	BT30-ER32- 90	2.0~20.0	50	90	M12	ER32	ER32+ET1-32	1.9	●

▶ For usable collet, please refer to page 80 and 81
▶ Higher balancing grade product could be supplied by customer's request.

ER COLLET CHUCK

MAS403-BT



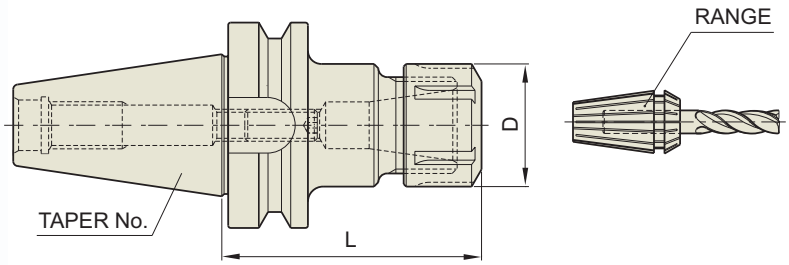

MAS403 -BT	Taper Accuracy	G Value	RPM	Coolant System
	AT3	6.3	12,000	

■ Standard type

TAPER No.	CODE No.	RANGE	D	L	M	NUT	COLLET	Weight (kg)	Stock
40	BT40-ER11- 75	0.5~7.0	19	75	M6	ER11	ER11+ET1-12	1.0	
	BT40-ER11-100	0.5~7.0	19	100	M6	ER11	ER11+ET1-12	1.1	
	BT40-ER16- 75	0.5~10.0	28	75	M10	ER16	ER16+ET1-16	1.1	●
	BT40-ER16-100	0.5~10.0	28	100	M10	ER16	ER16+ET1-16	1.2	●
	BT40-ER16-120	0.5~10.0	28	120	M10	ER16	ER16+ET1-16	1.4	
	BT40-ER20- 75	1.0~13.0	34	75	M12	ER20	ER20+ET1-20	1.4	
	BT40-ER20-100	1.0~13.0	34	100	M12	ER20	ER20+ET1-20	1.8	●
	BT40-ER20-135	1.0~13.0	34	135	M12	ER20	ER20+ET1-20	2.2	
	BT40-ER25- 75	1.0~16.0	42	75	M12	ER25	ER25+ET1-25	1.4	
	BT40-ER25-100	1.0~16.0	42	100	M12	ER25	ER25+ET1-25	1.8	●
	BT40-ER25-135	1.0~16.0	42	135	M12	ER25	ER25+ET1-25	2.2	
	BT40-ER25-150	1.0~16.0	42	150	M12	ER25	ER25+ET1-25	2.4	
	BT40-ER32- 60	2.0~20.0	50	60	M12	ER32	ER32+ET1-32	1.8	●
	BT40-ER32-100	2.0~20.0	50	100	M12	ER32	ER32+ET1-32	2.2	●
	BT40-ER32-120	2.0~20.0	50	120	M12	ER32	ER32+ET1-32	2.4	●
	BT40-ER32-150	2.0~20.0	50	150	M12	ER32	ER32+ET1-32	2.6	
	BT40-ER40- 80	3.0~30.0	63	80	M12	ER40	ER40+ET1-40	1.5	

▶ For usable collet, please refer to page 80 and 81

▶ Higher balancing grade product could be supplied by customer's request.

ER COLLET CHUCK

MAS403-BT



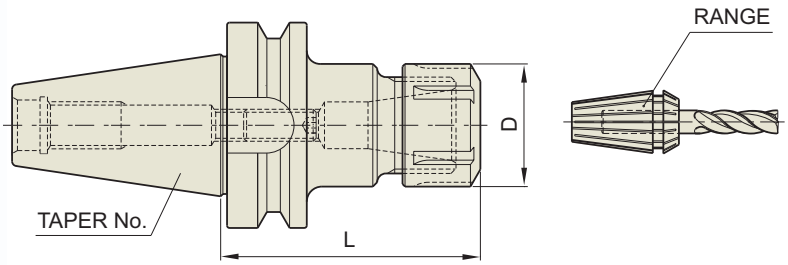

MAS403 -BT	Taper Accuracy	G Value	RPM	Coolant System
	AT3	6.3	12,000	

■ Standard type

TAPER No.	CODE No.	RANGE	D	L	M	NUT	COLLET	Weight (kg)	Stock
50	**BT50-ER16-100**	0.5~10.0	28	100	M10	ER16	ER16 + ET1-16	4.2	
	BT50-ER16-120	0.5~10.0	28	120	M10	ER16	ER16 + ET1-16	4.4	●
	BT50-ER16-165	0.5~10.0	28	165	M10	ER16	ER16 + ET1-16	4.6	
	BT50-ER20-100	1.0~13.0	34	100	M12	ER20	ER20 + ET1-20	4.6	●
	BT50-ER20-135	1.0~13.0	34	135	M12	ER20	ER20 + ET1-20	4.8	●
	BT50-ER20-165	1.0~13.0	34	165	M12	ER20	ER20 + ET1-20	5.0	
	BT50-ER25-100	1.0~16.0	42	100	M12	ER25	ER25 + ET1-25	4.7	
	BT50-ER25-135	1.0~16.0	42	135	M12	ER25	ER25 + ET1-25	4.8	●
	BT50-ER25-165	1.0~16.0	42	165	M12	ER25	ER25 + ET1-25	5.0	●
	BT50-ER32-100	2.0~20.0	50	100	M12	ER32	ER32 + ET1-32	5.2	●
	BT50-ER32-135	2.0~20.0	50	135	M12	ER32	ER32 + ET1-32	5.7	●
	BT50-ER32-165	2.0~20.0	50	165	M12	ER32	ER32 + ET1-32	5.8	●
	BT50-ER40-100	3.0~30.0	63	100	M12	ER40	ER40 + ET1-40	5.6	
	BT50-ER40-150	3.0~30.0	63	150	M12	ER40	ER40 + ET1-40	6.1	●
	BT50-ER50-100	12.0~34.0	78	100	M12	ER50	ER40 + ET1-40	5.8	
	BT50-ER50-150	12.0~34.0	78	150	M12	ER50	ER40 + ET1-40	6.3	●

▶ For usable collet, please refer to page 80 and 81

▶ Higher balancing grade product could be supplied by customer's request.

EXTENSION ER COLLET CHUCK - SLIM TYPE

ER



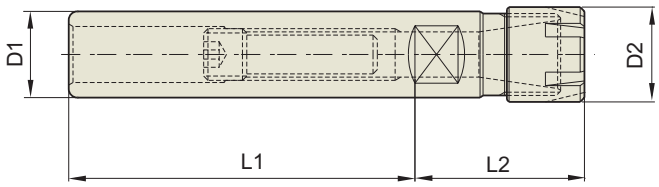

K	Taper Accuracy	G Value	RPM	Coolant System
	AT3			

TAPER No.	CODE No.	RANGE	D1	D2	L1	L2	NUT	Weight (kg)	Stock
12	**K12-ER8M-70**	0.5-5.0	12	12	70	25	ERM 8	0.10	●
16	**K16-ER11M-140**	0.5-7.0	16	16	140	32	ERM11	0.22	●
20	**K20-ER16M-140**	0.5-10.0	20	22	140	41	ERM16	0.32	●
	K20-ER20M-140	1.0-13.0	20	28	140	41	ERM20	0.35	
25	**K25-ER16M-140**	0.5-10.0	25	22	140	41	ERM16	0.45	●
	K25-ER20M-140	1.0-13.0	25	28	140	41	ERM20	0.52	
	K25-ER25M-140	1.0-16.0	25	35	140	45	ERM25	0.55	

TENSION ER CHUCK - Exclusive use for tapping

ERT

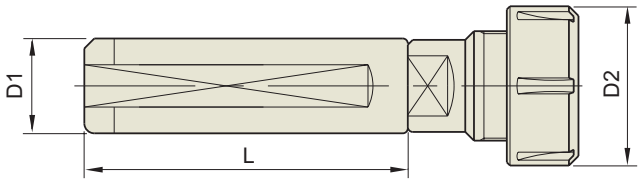

K	Taper Accuracy	G Value	RPM	Coolant System
	AT3			

TAPER No.	CODE No.	RANGE	D1	D2	L	NUT	Weight (kg)	Stock
20	**K20-ERT16-70**	0.5-10.0	20	28	70	ER16	0.4	
25	**K25-ERT16-70**	0.5-10.0	25	28	70	ER16	0.45	
	K25-ERT20-80	1.0-13.0	25	34	80	ER20	0.50	
32	**K32-ERT16-70**	0.5-10.0	32	28	70	ER16	0.70	
	K32-ERT20-80	1.0-13.0	32	34	80	ER20	0.80	
	K32-ERT25-80	1.0-16.0	32	42	80	ER25	1.00	
	K32-ERT32-80	2.0-20.0	32	50	80	ER32	1.20	

ER COLLET CHUCK

DIN69893-HSK FORM A

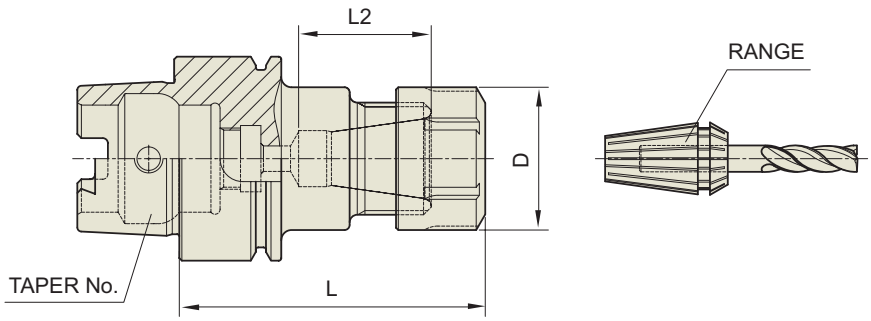

DIN69893 - HSK	Taper Accuracy	G Value	RPM	Coolant System
	AT3	6.3	12,000	

■ Standard Type

TAPER No.	CODE No.	RANGE	D	L	L2	NUT	Weight (kg)	Stock
40A	HSK40A-ER11-60	0.5 ~ 7.0	19	60	22	ER 11	0.40	●
	HSK40A-ER16-60	0.5 ~ 10.0	28	60	26	ER 16	0.50	●
	HSK40A-ER20-70	1.0 ~ 13.0	34	70	33	ER 20	0.80	●

■ Slim Type

TAPER No.	CODE No.	RANGE	D	L	L2	NUT	Weight (kg)	Stock
40A	HSK40A-ER11M-75	0.5 ~ 7.0	16	75	22	ER11M	0.40	●
	HSK40A-ER16M-80	0.5 ~ 10.0	22	80	26	ER16M	0.50	●
	HSK40A-ER20M-80	1.0 ~ 13.0	28	80	33	ER20M	0.70	●
	HSK40A-ER25M-80	1.0 ~ 16.0	35	80	40	ER25M	0.80	●

▶ Higher balancing grade product could be supplied by customer's request.

DIN69893-HSK FORM E

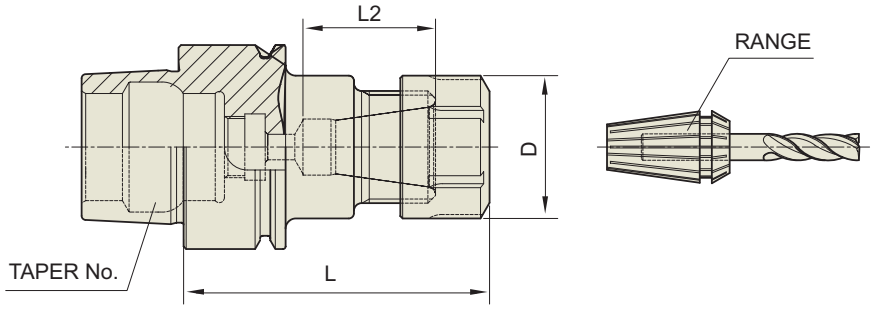

■ Standard Type

TAPER No.	CODE No.	RANGE	D	L	L2	NUT	Weight (kg)	Stock
40E	HSK40E-ER11-60	0.5 ~ 7.0	19	60	22	ER 11	0.40	●
	HSK40E-ER16-60	0.5 ~ 10.0	28	60	26	ER 16	0.50	●
	HSK40E-ER20-70	1.0 ~ 13.0	34	70	33	ER 20	0.80	●

■ Slim Type

TAPER No.	CODE No.	RANGE	D	L	L2	NUT	Weight (kg)	Stock
40E	HSK40E-ER11M-75	0.5 ~ 7.0	16	75	22	ER11M	0.40	●
	HSK40E-ER16M-80	0.5 ~ 10.0	22	80	26	ER16M	0.50	●
	HSK40E-ER20M-80	1.0 ~ 13.0	28	80	33	ER20M	0.70	●
	HSK40E-ER25M-80	1.0 ~ 16.0	35	80	40	ER25M	0.80	●

▶ Higher balancing grade product could be supplied by customer's request.

ER COLLET CHUCK

DIN69893-HSK FORM A



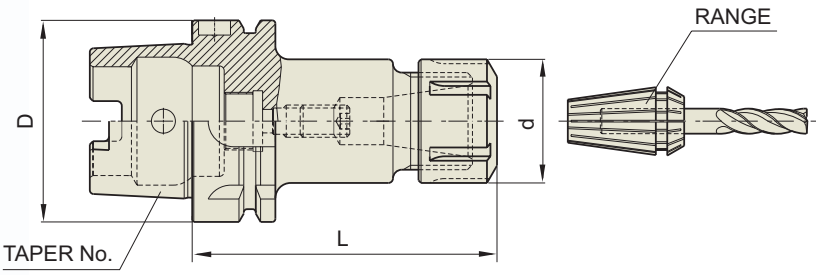

DIN69893 - HSK	Taper Accuracy	G Value	RPM	Coolant System
	AT3	6.3	12,000	

TAPER No.	CODE No.	RANGE	d	D	L	Weight (kg)	Stock
50A	HSK 50A-ER16-100	0.5-10	28	50	100	0.70	
	HSK 50A-ER20-100	1-13	35	50	100	0.90	
	HSK 50A-ER25-100	1-16	42	50	100	1.20	
	HSK 50A-ER32-100	2-20	50	50	100	1.50	
63A	HSK 63A-ER16-100	0.5-10	28	63	100	1.20	●
	HSK 63A-ER20-100	1-13	35	63	100	1.50	●
	HSK 63A-ER25-100	1-16	42	63	100	1.80	●
	HSK 63A-ER32-100	2-20	50	63	100	2.00	●
	HSK 63A-ER40-120	3-26	63	63	120	2.30	●
100A	HSK100A-ER16-100	0.5-10	28	100	100	2.60	●
	HSK100A-ER20-100	1-13	35	100	100	2.70	●
	HSK100A-ER25-100	1-16	42	100	100	2.90	●
	HSK100A-ER32-100	2-20	50	100	100	3.10	●
	HSK100A-ER40-120	3-26	63	100	120	3.30	●

▶ Higher balancing grade product could be supplied by customer's request.
▶ Internal oil supply mode is applicable when using ERC nut.

ERC NUT



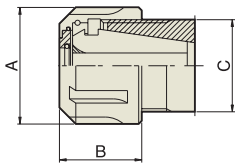

TYPE
HI-Q/ERC16
HI-Q/ERC20
HI-Q/ERC25
HI-Q/ERC32
HI-Q/ERC40

SEALING DISK



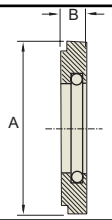

TYPE
DS/ER16
DS/ER20
DS/ER25
DS/ER32
DS/ER40

ER CHUCK

K



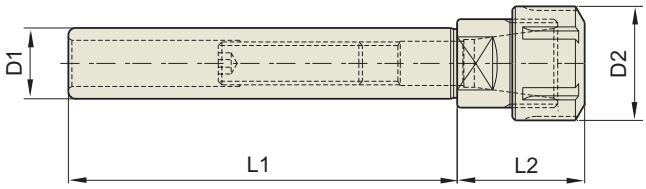

K	Taper Accuracy	G Value	RPM	Coolant System
	AT3			

■ Standard type

TAPER No.	CODE No.	RANGE	D1	D2	L1	L2	NUT	COLLET	Weight (kg)	Stock
16	**K16-ER11-100**	0.5-7.0	16	19	100	32	ER11	ER11 + ET1-12	0.15	●
	K16-ER16-100	0.5-10.0	16	28	100	36	ER16	ER16 + ET1-16	0.18	
20	**K20-ER16-100**	0.5-10.0	20	28	100	36	ER16	ER16 + ET1-16	0.25	●
	K20-ER20-100	1.0-13.0	20	34	100	40	ER20	ER20 + ET1-20	0.29	●
	K20-ER25-100	1.0-16.0	20	42	100	50	ER25	ER25 + ET1-25	0.35	
25	**K25-ER20-100**	1.0-13.0	25	34	100	40	ER20	ER20 + ET1-20	0.40	●
	K25-ER25-100	1.0-16.0	25	42	100	50	ER25	ER25 + ET1-25	0.45	●
32	**K32-ER16-100**	0.5-10.0	32	28	100	36	ER16	ER16 + ET1-16	0.50	●
	K32-ER20-100	1.0-13.0	32	34	100	40	ER20	ER20 + ET1-20	0.66	●
	K32-ER25-100	1.0-16.0	32	42	100	50	ER25	ER25 + ET1-25	0.75	●
	K32-ER32-100	2.0-20.0	32	50	100	58	ER32	ER32 + ET1-32	1.00	●

ER COLLET CHUCK

MTA

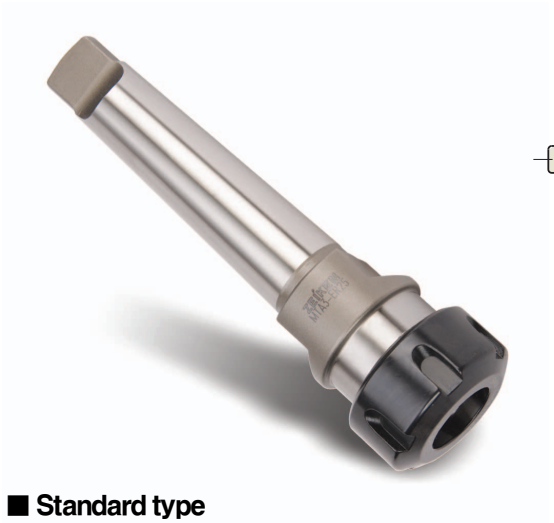

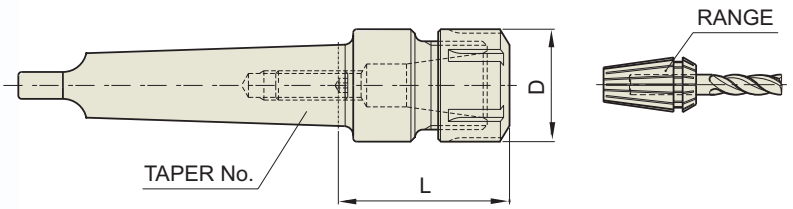

DIN228 - MTA | Taper Accuracy: AT3 | G Value | RPM | Coolant System

■ Standard type

TAPER No.	CODE No.	RANGE	D	L	NUT	COLLET	Weight (kg)	Stock
1	**MTA1-ER11**	0.5-7.0	19	35	ER11	ER11	0.30	
	MTA1-ER16	0.5-10	28	40	ER16	ER16	0.35	
2	**MTA2-ER20**	1-13	34	50	ER20	ER20	0.50	
	MTA2-ER25	1-16	42	50	ER25	ER25	0.60	
3	**MTA3-ER25**	1-16	42	60	ER25	ER25	0.60	
	MTA3-ER32	2-20	50	70	ER32	ER32	0.65	
4	**MTA4-ER20**	1-13	34	60	ER20	ER20	1.00	
	MTA4-ER25	1-16	42	60	ER25	ER25	1.10	
	MTA4-ER32	2-20	50	65	ER32	ER32	1.30	●
	MTA4-ER40	3-30	63	80	ER40	ER40	1.50	
5	**MTA5-ER32**	2-20	50	70	ER32	ER32	2.20	●
	MTA5-ER40	3-30	63	80	ER40	ER40	2.40	●
	MTA5-ER50	6-34	78	80	ER50	ER50	2.80	

ER COLLET CHUCK

MTB



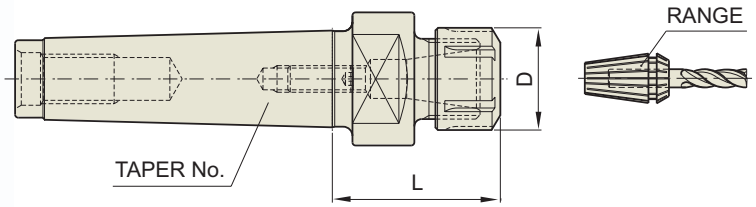

DIN228 - MTB | Taper Accuracy: AT3 | G Value | RPM | Coolant System

■ Standard type

TAPER No.	CODE No.	RANGE	D	L	NUT	COLLET	Weight (kg)	Stock
1	**MTB1-ER16**	1-10	28	40	ER16	ER16	0.35	
2	**MTB2-ER20**	1-13	34	50	ER20	ER20	0.50	
	MTB2-ER25	1-16	42	50	ER25	ER25	0.60	
3	**MTB3-ER25**	1-16	42	60	ER25	ER25	0.60	
	MTB3-ER32	2-20	50	70	ER32	ER32	0.65	
4	**MTB4-ER32**	2-20	50	70	ER32	ER32	1.10	●
	MTB4-ER40	3-30	63	80	ER40	ER40	1.30	
5	**MTB5-ER32**	2-20	50	70	ER32	ER32	2.00	●
	MTB5-ER40	3-30	63	80	ER40	ER40	2.20	●
	MTB5-ER50	6-34	78	80	ER50	ER50	2.60	●

ER COLLET CHUCK for CNC LATHE - NC



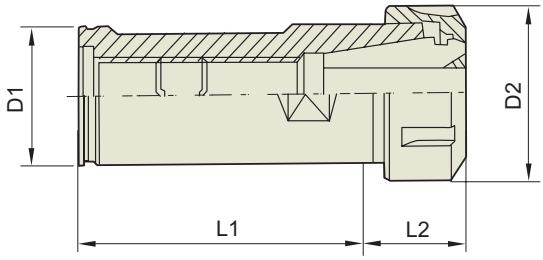

NC	Taper Accuracy	G Value	RPM	Coolant System
	AT3			

■ **Standard type**

TAPER No.	CODE No.	RANGE	D1	D2	L1	L2	NUT	COLLET	Weight (kg)	Stock
25	**NC25-ER11**	0.5-7.0	25	19	65	32	ER11	ER11	0.30	
	NC25-ER16	0.5-10.0	25	28	65	32	ER16	ER16	0.45	
	NC25-ER20	1.0-13.0	25	34	65	32	ER20	ER20	0.50	●
	NC25-ER25	1.0-16.0	25	42	65	32	ER25	ER25	0.55	●
32	**NC32-ER20**	1.0-13.0	32	34	70	32	ER20	ER20	0.60	
	NC32-ER25	1.0-16.0	32	42	70	38	ER25	ER25	0.70	●
	NC32-ER32	2.0-20.0	32	50	60	38	ER32	ER32	0.75	●
40	**NC40-ER32**	2.0-20.0	40	50	75	53	ER32	ER32	1.25	●
	NC40-ER40	3.0-30.0	40	63	75	53	ER40	ER40	1.30	

ER COLLET CHUCK for BRIDGEPORT - R8

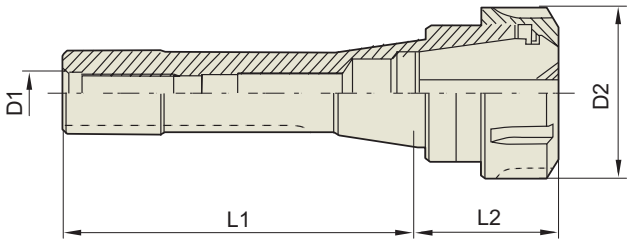

TAPER No.	CODE No.	RANGE	D1	D2	L1	L2	NUT	COLLET	Weight (kg)	Stock
R8	**R8-ER32**	2-20.0	U7/16	50	101.5	50	ER32	ER32 + ET1-32	1.00	
	R8-ER40	3-30.0	U7/16	63	101.5	75	ER40	ER40 + ET1-40	1.20	

ER COLLET CHUCK

DIN69871-SK



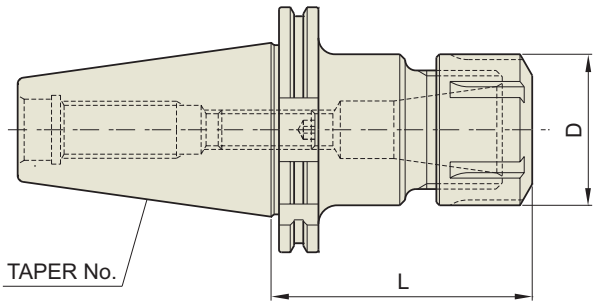

DIN69871 - SK	Taper Accuracy	G Value	RPM	Coolant System
	AT3	6.3	12,000	

■ STANDARD

TAPER No.	CODE No.	RANGE	D	L	NUT	RANGE	Weight (kg)	Stock
30	SK30-ER11-55	0.5~10.0	19	55	ER11	0.5-7		
	SK30-ER16-55	0.5~10.0	28	55	ER16	0.5-10		
	SK30-ER20-55	1.0~13.0	34	55	ER20	1-13		
	SK30-ER25-55	1.0~16.0	42	55	ER25	1-16		
	SK30-ER32-60	2.0~20.0	50	60	ER32	2-20		
40	SK40-ER11-70	0.5~7.0	19	70	ER11	0.5-7		
	SK40-ER16-70	0.5~10.0	28	70	ER16	0.5-10		
	SK40-ER20-70	1.0~13.0	34	70	ER20	1-13		
	SK40-ER25-70	1.0~16.0	42	70	ER25	1-16		
	SK40-ER32-70	2.0~20.0	50	70	ER32	2-20		
	SK40-ER40-80	3.0~30.0	63	80	ER40	3-26		
50	SK50-ER16-70	0.5~10.0	28	70	ER16	0.5-10		
	SK50-ER20-70	1.0~13.0	34	70	ER20	1-13		
	SK50-ER25-70	1.0~16.0	42	70	ER25	1-16		
	SK50-ER32-70	2.0~20.0	50	70	ER32	2-20		
	SK50-ER40-80	3.0~30.0	63	80	ER40	3-26		

■ EXTENDED

TAPER No.	CODE No.	RANGE	D	L	NUT	RANGE	Weight (kg)	Stock
40	SK40-ER16-100	0.5~10.0	28	100	ER16	0.5-10		
	SK40-ER20-100	1.0~13.0	34	100	ER20	1-13		
	SK40-ER25-100	1.0~16.0	42	100	ER25	1-16		
	SK40-ER32-100	2.0~20.0	50	100	ER32	2-20		
50	SK50-ER16-100	0.5~10.0	28	100	ER16	0.5-10		
	SK50-ER20-100	1.0~13.0	34	100	ER20	1-13		
	SK50-ER25-100	1.0~16.0	42	100	ER25	1-16		
	SK50-ER32-100	2.0~20.0	50	100	ER32	2-20		
	SK50-ER40-100	3.0~30.0	63	100	ER40	3-26		

▶ For usable collet, please refer to page 80 and 81
▶ Higher balancing grade product could be supplied by customer's request.

ER COLLET CHUCK

DIN69871-SK(AD/B)



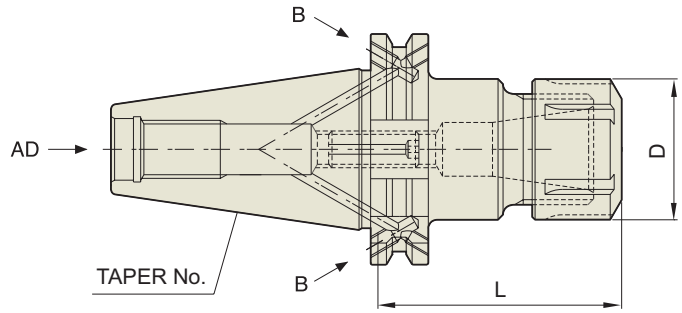

DIN69871 - SK	Taper Accuracy	G Value	RPM	Coolant System
	AT3	6.3	12,000	

■ STANDARD

TAPER No.	CODE No.	RANGE	D	L	NUT	RANGE	Weight (kg)	Stock
40	SK40AD/B-ER11-70	0.5~7.0	19	70	ER11	0.5-7	0.80	
	SK40AD/B-ER16-70	0.5~10.0	28	70	ER16	0.5-10	0.90	
	SK40AD/B-ER20-70	1.0~13.0	34	70	ER20	1-13	1.20	
	SK40AD/B-ER25-70	1.0~16.0	42	70	ER25	1-16	1.30	
	SK40AD/B-ER32-70	2.0~20.0	50	70	ER32	2-20	1.50	
	SK40AD/B-ER40-80	3.0~30.0	63	80	ER40	3-26	1.70	
50	SK50AD/B-ER16-70	0.5~10.0	28	70	ER16	0.5-10	2.80	
	SK50AD/B-ER20-70	1.0~13.0	34	70	ER20	1-13	2.90	
	SK50AD/B-ER25-70	1.0~16.0	42	70	ER25	1-16	3.10	
	SK50AD/B-ER32-70	2.0~20.0	50	70	ER32	2-20	3.30	
	SK50AD/B-ER40-80	3.0~30.0	63	80	ER40	3-26	3.50	

■ EXTENDED

TAPER No.	CODE No.	RANGE	D	L	NUT	RANGE	Weight (kg)	Stock
40	SK40AD/B-ER16-100	0.5~10.0	28	100	ER16	0.5-10	1.05	
	SK40AD/B-ER20-100	1.0~13.0	34	100	ER20	1-13	1.13	
	SK40AD/B-ER25-100	1.0~16.0	42	100	ER25	1-16	1.35	
	SK40AD/B-ER32-100	2.0~20.0	50	100	ER32	2-20	1.43	
50	SK50AD/B-ER16-100	0.5~10.0	28	100	ER16	0.5-10	2.90	
	SK50AD/B-ER20-100	1.0~13.0	34	100	ER20	1-13	3.10	
	SK50AD/B-ER25-100	1.0~16.0	42	100	ER25	1-16	3.30	
	SK50AD/B-ER32-100	2.0~20.0	50	100	ER32	2-20	3.50	
	SK50AD/B-ER40-100	3.0~26.0	63	100	ER40	3-26	3.80	

▶ For usable collet, please refer to page 80 and 81

▶ Higher balancing grade product could be supplied by customer's request.