STANDARD EQUIPMENT

ISO Standard cabin
- All-weather steel cab with 360° visibility
- Safety glass windows
- Rise-up type windshield wiper
- Sliding fold-in front window
- Sliding side window(LH)
- Lockable door
- Hot & cool box
- Storage compartment & Ashtray
- Transparent cabin roof-cover
- Radio & USB player
- Handsfree mobile phone system with USB
- 12 volt power outlet (24V DC to 12V DC converter)
- Sun visor

Computer aided power optimization (New CAPO) system
- 3-power mode, 2-work mode, User mode
- Auto deceleration & one-touch deceleration system
- Auto warm-up system
- Auto overheat prevention system

Automatic climate control
- Air conditioner & heater
- Defroster

Self-diagnostics system

Starting Aid (air grid heater) for cold weather

Centralized monitoring
- LCD display
- Engine speed or Trip meter/Accel.
- Clock
- Gauges
- Fuel level gauge
- Engine coolant temperature gauge
- Hyd. oil temperature gauge
- Warnings
- Check engine
- Overload
- Communication error
- Low battery
- Air cleaner clogging
- Indicators
- Max power
- Low speed/High speed
- Fuel warmer
- Auto idle

Three outside rearview mirrors

Mechanical suspension seat with heater

Pilot-operated slidable joystick

Console box height adjust system

Four front working lights, one rear light

Electric horn

Batteries (2 x 12V x 200 AH)

Battery master switch

Removable clean-out dust net for cooler

Automatic swing brake

Automatic fuel line deaeration

Fuel pre-filter with fuel warmer

Boom holding system

Arm holding system

Track shoes (600mm, 24")

Track rail guard

Accumulator for lowering work equipment

Electric transducer

Lower frame under cover (Normal)

Viscous fan clutch

Travel alarm

OPTIONAL EQUIPMENT

Fuel filler pump (50 L/min)

Beacon lamp

Safety lock valve for boom cylinder with overload warning device

Safety lock valve for arm cylinder

Single-acting piping kit (breaker, etc.)

Double-acting piping kit (clamshell, etc.)

Quick coupler

Arms
- 2.6 m, 8' 6"

Counterweight
- 7,000kg (15,430lb)
- 8,100kg (17,860lb)

Climate control
- Air conditioner only
- Heater only

Cabin FOPS/FOG (ISO/DIS 10262 Level II)
- FOPS (Falling Object Protective Structure)
- FOG (Falling Object Guard)

Cabin ROPS (ISO 12117-2)
- ROPS (Roll Over Protective Structure)

Cabin guard front
- Wire net
- Fine net

Cabin roof-steel cover

Cabin lights

Cabin front window rain guard

Track shoes
- Triple grousers shoe (Heavy duty 600mm, 24")
- Triple grousers shoe (Heavy duty 700mm, 28")
- Triple grousers shoe (700mm, 28")
- Triple grousers shoe (750mm, 30")
- Triple grousers shoe (800mm, 32")
- Triple grousers shoe (900mm, 36")
- Double grousers shoe (600mm, 24")
- Double grousers shoe (700mm, 28")
- Semi-full track guard
- Full track guard

Lower frame under cover (Additional)

Pre-heating system, coolant

Tool kit

Rearview camera

Seat
- Adjustable air suspension seat
- Adjustable air suspension seat with heater
- Mechanical suspension seat

Pattern change valve (2 patterns)

Hi-mate (Remote Management System)

Air compressor

* Standard and optional equipment may vary. Contact your Hyundai dealer for more information. The machine may vary according to International standards.
* The photos may include attachments and optional equipment that are not available in your area.
* Materials and specifications are subject to change without advance notice.
* All imperial measurements rounded off to the nearest pound or inch.

PLEASE CONTACT

www.hyundai-ce.com 2015. 11 Rev. 2

HYUNDAI HEAVY INDUSTRIES CONSTRUCTION EQUIPMENT

Head Office
1000 BANGEOJINSUNHWAN-DORO, DONG-GU, ULSAN, 682-792, KOREA
TEL:(82)52-202-7722, 9807 FAX:(82)52-202-7720

999009-502940

We build a better future

Robex
430LC-9
With Tier 3 Engine installed



*Photo may include optional equipment.

HYUNDAI HEAVY INDUSTRIES

Pride at Work

Hyundai Heavy Industries strives to build state-of-the art earthmoving equipment to give every operator maximum performance, more precision, versatile machine preferences, and proven quality. Take pride in your work with Hyundai!

*Photo may include optional equipment.

Robex 430LC-9

Machine Walk-Around

Engine Technology

Proven / reliable, fuel efficient HYUNDAI HE 8.9 engine
Electronically controlled for optimum fuel to air ratio and clean, efficient combustion
Low noise / Auto engine overheat feature / Anti-restart feature

Hydraulic System Improvements

New patented hydraulic control for improved controllability / Improved control valve design for added efficiency and smoother operation / New auto boom and swing priority system for optimum speed / New auto power boost feature for additional power when needed / Improved arm-in and boom-down flow regeneration system for added speed and efficiency

Pump Compartment

Industry-leading, powerful, reliable Kawasaki designed, variable volume in-line axial piston pumps
New compact solenoid block equipped with 4 solenoid valves, 1 EPPR valve, 1 check valve accumulator and pilot filter - controls 2 speed travel, power boost, boom priority, safety lock

Enhanced Operator Cab

Improved Visibility
Enlarged cab with improved visibility / See-through upper skylight for visibility and ventilation
Larger right-side glass, now one piece, for better right visibility
Safety glass windows on all sides - less expensive than (polycarbonate) and won't scratch or fade
Closeable sunshade for operator convenience / Reduced front window seam for improved operator view

Improved Cab Construction
New steel tube construction for added operator safety, protection and durability
New window open/close mechanism designed with cable and spring lift assist and single latch release

Improved Suspension Seat / Console Assembly
Ergonomic joysticks with auxiliary control buttons for attachment use. Now with new sleek styling
Heated suspension (standard) or optional air ride suspension with heat
New joystick consoles - now adjustable in height by way of dial at bottom
Adjustable arm rests - turn dial to raise or lower for optimum comfort

Advanced 7" Color Cluster
New Color LCD Display with easy to read digital gauges for hydraulic oil temperature, water temperature, and fuel. Simplified design makes adjustment and diagnostics easier. Also, new enhanced features such as rear-view camera are integrated into monitor.
3 power modes : (P) Power, (S) Standard, (E) Economy, 2 work modes : Dig & Attachment, (U) User mode for operator preference
Enhanced self-diagnostic features with GPS download capability
One pump flow or two pump flow for optional attachment now selectable through the cluster / New anti-theft system with password capability
Boom speed and arm regeneration are selectable through the monitor.
Auto power boost is now available - selectable (on/off) through the monitor.
Powerful air conditioning and heat with auto climate control, 20% more heat and air output than 7A series!
RMS (Remote Management System) works through GPS/satellite technology to ultimately provide better customer service and support.

Undercarriage

Sealed track chain (urethane seals) / Standard track rail guard / Comfortable bolt-on steps
Large upper roller cut-outs for debris clean-out / Tapered side frames for debris clean-out / Grease-type track tensioner

Preference

Operating a 9 series is unique to every operator. Operators can fully customize their work environment and operating preferences to fit their individual needs.

*Photo may include optional equipment.



Wide Cabin with Excellent Visibility

The newly designed cabin was conceived for more space, a wider field of view and operator comfort. Special attention was given to a clear, open and convenient interior with plenty of visibility on the machine surroundings and the job at hand. This well balanced combination of precision aspects put the operator in the perfect position to work safely and securely.

Operator Comfort

In 9 series cabin you can easily adjust the seat, console and armrest settings to best suit your preferred comfort level. Seat and console position and height can be set together and independent from each other. Other preference settings that add to overall operator comfort include the full automatic high capacity airconditioning system and the Radio / USB player.





Reduced Stress

Work is stressful enough. Your work environment should be stress free. Hyundai's 9 series provides improved cab amenities, additional space and a comfortable seat to minimize stress to the operator. A powerful climate control system provides the operator with optimum air temperature. An advanced audio system with USB player, AM/FM stereo, plus remotely located controls is perfect for listening to music favorites.
Operators can even talk on the phone with the hands-free cell phone feature.



Operator - Friendly Cluster

The advanced new cluster with 7 inch wide color LCD screen and toggle switch allows the operator to select his personal machine preferences. Power and work mode selection, self diagnostics, optional rear-view camera, maintenance check lists, start-up machine security, and video functions were integrated into the cluster to make the machine more versatile and the operator more productive.



Precision

Innovative hydraulic system technologies make the 9 series excavator fast, smooth and easy to control.

*Photo may include optional equipment.

Computer Aided Power

The engine horsepower and hydraulic horsepower together in unison through the advanced CAPO(Computer Aided Power Optimization) system, flow for the job at hand. Operator can set their own preferences for boom or swing priority, power mode selection and optional work tools at the touch of a button.
The CAPO system also provides complete self diagnostic features and digital gauges for important information like hydraulic oil temperature, water temperatures and fuel level. This system interfaces with multiple sensors placed throughout the hydraulic system as well as the electronically controlled engine to provide the optimum level of engine power and hydraulic flow.

Power Mode

P (Power Max) mode maximizes machine speed and power for mass production.
S (Standard) mode provides a reduced, fixed rpm for optimum performance and improved fuel economy. For maximum fuel savings and improved control, E (Economy) mode provides precise flow and engine power based on load demand. Three unique power modes provide the operator with custom power, speed and fuel economy.

Work Mode

The work mode allows the operator to select single flow attachments like a hydraulic breaker or bi-directional flow attachments like a crusher. Flow settings unique to each attachment can be programmed from within the cluster.

User Mode

Some jobs require more precise machine settings. Using the versatile U (User) mode, the operator can customize engine speed, pump output, idle speed and other machine settings for the job at hand.

Improved Hydraulic System



To achieve optimum precision, Hyundai redesigned the hydraulic system to provide the operator with super fine touch and improved controllability. Improved pump flow control reduces flow when controls are not being used to minimize fuel consumption.
Improved spool valves in the control valve are engineered to provide more precise flow to each function with less effort.
Improved hydraulic valves, precision-designed variable volume piston pumps, fine-touch pilot controls, and enhanced travel functions make any operator running a 9 series look like a smooth operator. Newly improved features include arm-in and boom-down flow regeneration, improved control valve technology and innovative auto boom and swing priority for optimal performance in any application.



Auto Boom-swing Priority

This smart function automatically and continuously looks the ideal hydraulic flow balance for the boom and swing motions of the machine. The advanced CAPO system monitors the hydraulic system and adjusts its settings to maximize performance and productivity.

Performance

9 series is designed for maximum performance to keep the operator working productively.

*Photo may include optional equipment.



Track Rail Guard & Adjusters

Durable track rail guards keep track links in place. Track adjustment is made easy with standard grease cylinder track adjusters and shock absorbing springs.

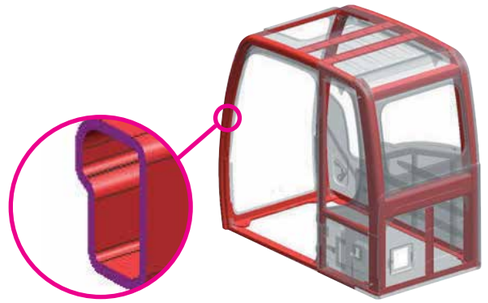

Structure Strength

The 9 series cabin structure has been fitted with stronger but slimmer tubing for more safety and improved visibility. Low-stress, high strength steel is integrally welded to form a stronger, more durable upper and lower frame. Structural integrity was tested by way of FEM (Finite Elements Method) analysis and long-term durability tests.
The optional ROPS(Roll Over Protective Structure) cab can be equipped to enhance operator safety.

HYUNDAI HE 8.9 ENGINE

The Tier III, six cylinder, 4 cycle, turbo-charged, charge air cooled, HYUNDAI HE 8.9 engine provides maximum power, reliability, optimum fuel economy, and reduced emissions. Electronically controlled fuel injection and diagnostic capabilities add to the engines efficiency and serviceability.

Heavy-duty strength

Everyone who's ever worked on construction equipment knows, there is no substitute for power and durabilty. HYUNDAI HE 8.9 handles the toughest loads and the roughest work conditions.
At the same time, it delivers better fuel economy, has better cold starting capability and is up to 50% quieter in operation. Plus, the heavy-duty design of HYUNDAI HE 8.9 engine block and components such as articulated pistons, enhanced camshaft and roller cam followers, viscous damper and high capacity lube system add reliability and durability you can count on every day, year after year.
Both fuel-efficiency and response are significantly enhanced with the Cummins high pressure common rail fuel system. The system delivers high pressure injection, independent of engine speed, for optimum performance and flexibility at every rpm.

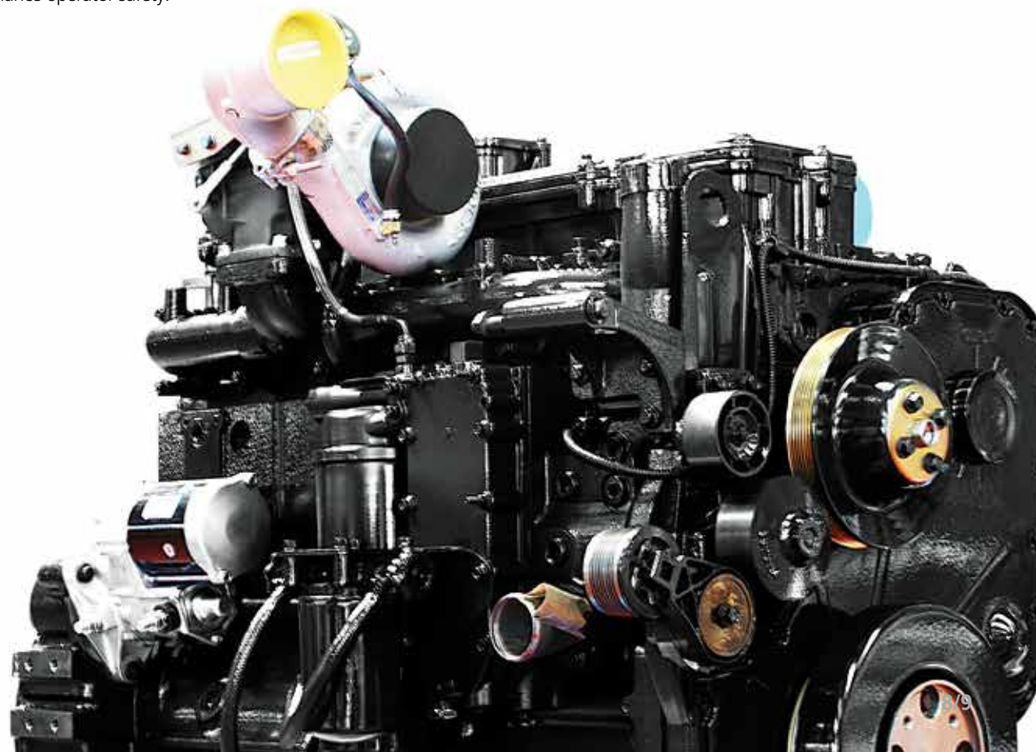

Profitability

9 series is designed to maximize profitability through improved efficiencies, enhanced service features and longer life components.

*Photo may include optional equipment.



Hi-mate (Remote Management System)

Hi-mate, Hyundai's proprietary remote management system, provides operators and dealer service personnel access to vital service and diagnostic information on the machine from any computer with internet access. Users can pinpoint machine location using digital mapping and set machine work boundaries, reducing the need for multiple service calls. Hi-mate saves time and money for the owner and dealer by promoting preventative maintenance and reducing machine downtime.

Fuel Efficient

9 series excavators are engineered to be extremely fuel efficient. New innovations like the variable speed fan clutch, two-stage auto decel system and the new economy mode help to conserve fuel and reduce the impact on the environment.



Easy Access

Ground-line access to filters, lube fittings, fuses, machine computer components and wide open compartments makes service more convenient on the 9 series.



Long-Life Components

9 series excavators were designed with bushings designed for long-life lube intervals (250 hrs) & polymer shims (wear resistant, noise reducing), long-life hydraulic filters (1,000hrs), long-life hydraulic oil (5,000hrs), more efficient cooling systems and integrated preheating systems which extend service intervals, minimize operating costs and reduce machine down time.

Specifications

ENGINE

MODEL			HYUNDAI HE 8.9
Type			Water-cooled, 4-cycle Diesel, 6-Cylinder in-line, Direct injection, Turbocharged, Charger air cooled, Low emission
Rated flywheel horse power	SAE	J1995 (gross)	296 HP (221 kW)/ 1,850 rpm
		J1349 (net)	271 HP (202 kW)/ 1,850 rpm
	DIN	6271/1 (gross)	300 PS (221 kW)/ 1,850 rpm
		6271/1 (net)	275 PS (202 kW)/ 1,850 rpm
Max. torque			148.0 kgf·m(1,070 lbf·ft)/ 1,400 rpm
Bore X stroke			114 x 145 mm (4.5" x 5.7")
Piston displacement			8,900cc (540 in^3)
Batteries			2 X 12V X 160AH
Starting motor			24V- 7.5kW
Alternator			24V- 70Amp

HYDRAULIC SYSTEM

MAIN PUMP	
Type	Variable displacement piston pump
Rated flow	2 X 333L /min (76.3 US gpm / 63.5 UK gpm)
Sub-pump for pilot circuit	Gear pump

Cross-sensing and fuel saving pump system.

HYDRAULIC MOTORS	
Travel	Two speed axial pistons motor with brake valve and parking brake
Swing	Axial piston motor with automatic brake

RELIEF VALVE SETTING	
Implement circuits	330 kgf/cm^2 (4,690 psi)
Travel	360 kgf/cm^2 (5,120 psi)
Power boost (boom, arm, bucket)	360 kgf/cm^2 (5,120 psi)
Swing circuit	290 kgf/cm^2 (4,125 psi)
Pilot circuit	40 kgf/cm^2 (569 psi)
Service valve	Installed

HYDRAULIC CYLINDERS	
No. of cylinder bore X stroke	Boom: 2-160 X 1,500 mm (6.3"X 59.1")
	Arm: 1-170 X 1,760 mm (6.7" X 69.3")
	Bucket: 1-150 X 1,295 mm (5.9" X 51.0")

DRIVES & BRAKES

Drive method	Fully hydrostatic type
Drive motor	Axial piston motor, in-shoe design
Reduction system	Planetary reduction gear
Max. drawbar pull	34,000 kgf (74,960 lbf)
Max. travel speed(high) / (low)	5.1 km/hr (3.5 mph) / 3.3 km/hr (2.2 mph)
Gradeability	35^0 (70 %)
Parking brake	Multi wet disc

CONTROL

Pilot pressure operated joysticks and pedals with detachable lever provide almost effortless and fatigueless operation.

Pilot control	Two joysticks with one safety lever (LH): Swing and arm, (RH): Boom and bucket(ISO)
Traveling and steering	Two levers with pedals
Engine throttle	Electric, Dial type

SWING SYSTEM

Swing motor	Fixed displacement axial pistons motor
Swing reduction	Planetary gear reduction
Swing bearing lubrication	Grease-bathed
Swing brake	Multi wet disc
Swing speed	9.6 rpm

COOLANT & LUBRICANT CAPACITY

Refilling	liter	US gal	UK gal
Fuel tank	550	145.3	121.0
Engine coolant	45.0	11.9	9.9
Engine oil	30	7.9	6.6
Swing device-gear oil	8.0	2.1	1.8
Final drive(each)-gear oil	12	3.2	2.6
Hydraulic system(including tank)	410	108.3	90.2
Hydraulic tank	210	55.5	46.2

UNDERCARRIAGE

The X-leg type center frame is integrally welded with reinforced box-section track frames. The undercarriage includes lubricated rollers, idlers, track adjusters with shock absorbing springs and sprockets, and a track chain with double or triple grouser shoes.

Center frame	X - leg type
Track frame	Pentagonal box type
No. of shoes on each side	53
No. of carrier roller on each side	2
No. of track roller on each side	9
No. of rail guard on each side	2

OPERATING WEIGHT (APPROXIMATE)

Operating weight, including 6,500mm (21' 4") H/D boom, 3,200mm (10' 6") H/D arm, SAE heaped 1.9m^3 (2.12 yd^3) bucket, lubricant, coolant, full fuel tank, full hydraulic tank, and all standard equipments.

MAJOR COMPONENT WEIGHT	
Upperstructure	8,750 kg (19,290 lb)
Boom (with arm cylinder)	3,890 kg (8,330 lb)
Arm (with bucket cylinder)	2,050 kg (4,430 lb)

OPERATING WEIGHT			
Shoes		Operating weight	Ground pressure
Type	Width mm (in)	kg(lb)	kgf/cm^2(psi)
Triple grouser	600 (24")	42,600 (93,920)	0.74 (10.52)
	700 (28")	43,140 (95,110)	0.64 (9.10)
	750 (30")	43,410 (95,700)	0.60 (8.53)
	800 (32")	43,680 (96,300)	0.57 (8.11)
	900 (36")	44,220 (97,490)	0.51 (7.25)
Triple grouser (Heavy Duty)	600 (24")	43,440 (95,770)	0.75 (10.67)
	700 (28")	44,380 (97,840)	0.66 (9.39)
Double grouser	600 (24")	42,600 (93,920)	0.74 (10.52)
	700 (28")	43,140 (95,110)	0.64 (9.10)

BUCKETS

All buckets are welded with high-strength steel.

SAE heaped m^3 (yd^3)



Ⓡ 2.10 (2.75)



Ⓡ 1.90 (2.49)

Capacity m^3 (yd^3)		Width mm (in)		Weight kg (lb)	Recommendation mm (ft·in)	
					6,500 (21' 4") Boom	
SAE heaped	CECE heaped	Without side cutters	With side cutters		2,600 (8' 6") Arm	3,200 (10' 6") Arm
Ⓡ1.90 (2.49)	1.65 (2.16)	1,662 (65.6))	-	1,984 (4,370)	◐	■
Ⓡ2.10 (2.75)	1.84 (2.41)	1,800 (70.9)	-	2,085 (4,600)	■	–

Ⓡ Rock-heavy duty bucket

● : Applicable for materials with density of 2,100 kg /m^3 (3,500 lb/ yd^3) or less
◐ : Applicable for materials with density of 1,800 kg /m^3 (3,000 lb/ yd^3) or less
■ : Applicable for materials with density of 1,500 kg /m^3 (2,500 lb/ yd^3) or less
▣ : Applicable for materials with density of 1,200 kg /m^3 (2,000 lb/ yd^3) or less
▲ : Applicable for materials with density of 900 kg /m^3 (1,500 lb/ yd^3) or less
– : Not recommended

ATTACHMENT

Booms and arms are welded, a low-stress, full-box section design. 6.5m, 2.6m booms and 6.5m, 3.2m arms are available.

DIGGING FORCE

					Remarks
Boom	Length	mm (ft·in)	6,500 (21' 4")		
	Weight	kg (lb)	3,780 (8,330)		
Arm	Length	mm (ft·in)	2,600 (8' 6")	3,200 (10' 6")	
	Weight	kg (lb)	1,990 (4,390)	2,010 (4,430)	
Bucket digging force	SAE	kN	200.2 [218.4]	200.1 [218.2]	[ ]: Power Boost
		kgf	20,410 [22,270]	20,400 [22,260]	
		lbf	45,000 [49,090]	44,970 [49,060]	
	ISO	kN	228.7 [249.5]	228.6 [249.4]	
		kgf	23,320 [25,440]	23,310 [25,430]	
		lbf	51,410 [56,080]	51,390 [56,060]	
Arm crowd force	SAE	kN	180.7 [197.2]	152.2 [166.0]	
		kgf	18,430 [20,110]	15,520 [16,940]	
		lbf	40,630 [44,320]	34,220 [37,330]	
	ISO	kN	188.0 [205.1]	157.5 [171.8]	
		kgf	19,170 [20,910]	16,060 [17,520]	
		lbf	42,260 [46,100]	35,410 [38,630]	

Note: Boom weight includes arm cylinder, piping, and pin
Arm weight includes bucket cylinder, linkage, and pin

Dimensions & Working Range

R430LC-9 DIMENSIONS

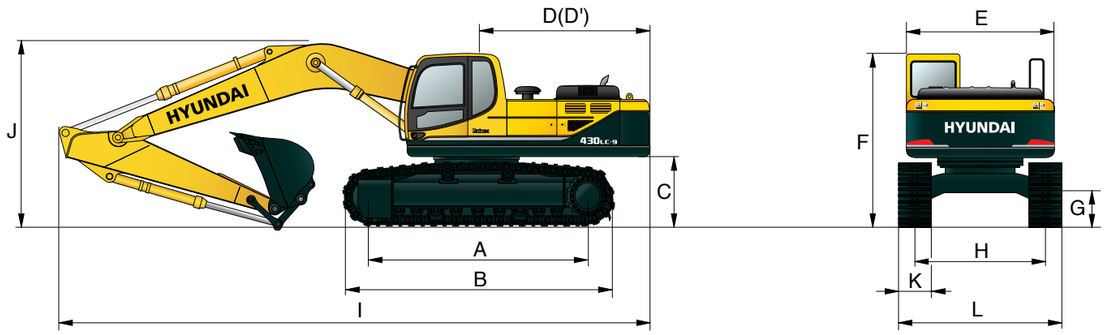

mm (ft·in)

A	Tumbler distance	4,470 (14′ 3″)
B	Overall length of crawler	5,462 (17′ 4″)
C	Ground clearance of counterweight	1,295 (4′ 3″)
D	Tail swing radius	3,415 (11′ 2″)
D′	Rear-end length	3,350 (10′ 12″)
E	Overall width of upperstructure	2,980 (9′ 9″)
F	Overall height of cab	3,190 (10′ 5″)
G	Min. ground clearance	555 (1′ 10″)
H	Track gauge	2,740 (8′ 12″)

mm (ft·in)

	Boom length	6,500 (21′ 4″)				
	Arm length	2,600 (8′ 6″)	3,200 (10′ 6″)			
I	Overall length	11,240 (36′ 11″)	11,270 (36′ 12″)			
J	Overall height of boom	3,780 (12′ 5″)	3,500 (11′ 6″)			
K	Track shoe width	600 (24″)	700 (28″)	750 (30″)	800 (32″)	900 (36″)
L	Overall width	3,340 (10′ 11″)	3,440 (11′ 3″)	3,490 (11′ 5″)	3,540 (11′ 7″)	3,640 (11′ 11″)

R430LC-9 WORKING RANGE

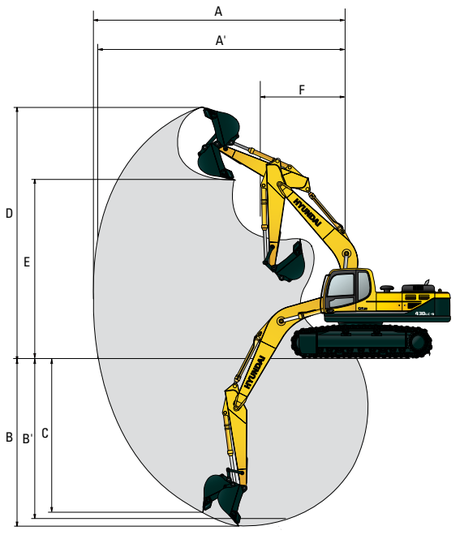

mm (ft·in)

	Boom length	6,500 (21′ 4″)	
	Arm length	2,600 (8′ 6″)	3,200 (10′ 6″)
A	Max. digging reach	10,820 (35′ 6″)	11,250 (36′ 11″)
A′	Max. digging reach on ground	10,580 (34′ 9″)	11,030 (36′ 2″)
B	Max. digging depth	6,870 (22′ 6″)	7,470 (24′ 6″)
B′	Max. digging depth (8' level)	6,690 (21′ 11″)	7,310 (23′ 12″)
C	Max. vertical wall digging depth	6,000 (19′ 8″)	6,290 (20′ 8″)
D	Max. digging height	10,710 (35′ 2″)	10,630 (34′ 11″)
E	Max. dumping height	7,480 (24′ 6″)	7,470 (24′ 6″)
F	Min. swing radius	4,530 (14′ 10″)	4,450 (14′ 7″)

Lifting Capacity

R430LC-9

Rating over-front Rating over-side or 360 degree

Boom : 6.5 m (21′ 4″) / Arm : 2.6 m (10′ 6″) / Bucket : 2.10 m³ (2.75 yd³) SAE heaped / Shoe : 600mm(24″) triple grouser

Load point height m (ft)		Load radius												At max. reach		
		1.5 m (5 ft)		3.0 m (10 ft)		4.5 m (15 ft)		6.0 m (20 ft)		7.5 m (25 ft)		9.0 m (30 ft)		Capacity		Reach
9.0 m	kg													*6020	*6020	7.12
(30 ft)	lb													*13270	*13270	(23.4)
7.5 m	kg													*5940	5660	8.39
(25 ft)	lb													*13100	12480	(27.5)
6.0 m	kg							*7070	*7070	*6570	*6570			*6020	4550	9.20
(20 ft)	lb							*15590	*15590	*14480	*14480			*13270	10030	(30.2)
4.5 m	kg					*10890	*10890	*8400	*8400	*7190	6790			*6170	3950	9.69
(15 ft)	lb					*24010	*24010	*18520	*18520	*15850	14970			*13600	8710	(31.8)
3.0m	kg					*14190	*14190	*9990	9460	*8020	6450	*5280	4530	*6370	3670	9.90
(10 ft)	lb					*31280	*31280	*22020	20860	*17680	14220	*11640	9990	*14040	8090	(32.5)
1.5 m	kg					*16530	13940	*11390	8870	*8820	6130	*6160	4380	*6600	3620	9.85
(5 ft)	lb					*36440	30730	*25110	19550	*19440	13510	*13580	9660	*14550	7980	(32.3)
Ground	kg					*17350	13540	*12240	8510	*9360	5910			*6850	3810	9.55
Line	lb					*38250	29850	*26980	18760	*20640	13030			*15100	8400	(31.3)
-1.5 m	kg			*18300	*18300	*17100	13500	*12400	8380	*9440	5820			*7060	4330	8.95
(-5 ft)	lb			*40340	*40340	*37700	29760	*27340	18470	*20810	12830			*15560	9550	(29.4)
-3.0 m	kg	*20700	*20700	*22350	*22350	*15910	13710	*11730	8470					*7110	5430	8.00
(-10 ft)	lb	*45640	*45640	*49270	*49270	*35080	30230	*25860	18670					*15670	11970	(26.2)
-4.5 m	kg			*18450	*18450	*13360	*13360	*9560	8830					*6560	*6560	6.49
(-15 ft)	lb			*40680	*40680	*29450	*29450	*21080	19470					*14460	*14460	(21.3)

Boom : 6.5 m (21′ 4″) / Arm : 3.2 m (10′ 6″) / Bucket : 1.90 m³ (2.49 yd³) SAE heaped / Shoe : 600mm(24″) triple grouser

Load point height m (ft)		Load radius												At max. reach		
		1.5 m (5 ft)		3.0 m (10 ft)		4.5 m (15 ft)		6.0 m (20 ft)		7.5 m (25 ft)		9.0 m (30 ft)		Capacity		Reach
9.0 m	kg													*5360	*5360	7.74
(30 ft)	lb													*11820	*11820	(25.4)
7.5 m	kg									*3900	*3900			*5410	5250	8.91
(25 ft)	lb									*8600	*8600			*11930	11570	(29.2)
6.0 m	kg									*5980	*5980			*5540	4300	9.68
(20 ft)	lb									*13180	*13180			*12210	9480	(31.8)
4.5 m	kg							*7640	*7640	*6670	*6670			*5730	3760	10.14
(15 ft)	lb							*16840	*16840	*14700	*14700			*12630	8290	(33.3)
3.0m	kg					*12880	*12880	*9320	*9320	*7590	6670	*3800	*3800	*5980	3490	10.34
(10 ft)	lb					*28400	*28400	*20550	*20550	*16730	14700	*8380	*8380	*13180	7690	(33.9)
1.5 m	kg					*15700	14410	*10900	9130	*8510	6310	*5750	4720	*6250	3430	10.29
(5 ft)	lb					*34610	31770	*24030	20130	*18760	13910	*12680	10410	*13780	7560	(33.8)
Ground	kg			*13740	*13740	*17160	13750	*12010	8670	*9220	6030	*6910	4530	*6560	3570	10.01
Line	lb			*30290	*30290	*37830	30310	*26480	19110	*20330	13290	*15230	9990	*14460	7870	(32.8)
-1.5 m	kg	*14390	*14390	*18220	*18220	*17420	13540	*12480	8450	*9530	5880	*6440	4380	*6880	3980	9.44
(-5 ft)	lb	*31720	*31720	*40170	*40170	*38400	29850	*27510	18630	*21010	12960	*12400	9660	*15170	8770	(31.0)
-3.0 m	kg	*18590	*18590	*23550	*23550	*16700	13630	*12190	8440	*9220	5890			*7140	4830	8.55
(-10 ft)	lb	*40980	*40980	*51920	*51920	*36820	30050	*26870	18610	*20330	12990			*15740	10650	(28.1)
-4.5 m	kg	*23340	*23340	*21080	*21080	*14800	13960	*10810	8660					*7160	6750	7.18
(-15 ft)	lb	*51460	*51460	*46470	*46470	*32630	30780	*23830	19090					*15790	14880	(23.6)
-6.0 m	kg					*10680	*10680									
(-20 ft)	lb					*23550	*23550									

1. Lifting capacity is based on SAE J1097, ISO 10567.
2. Lifting capacity of the Robex Series does not exceed 75% of the tipping load with the machine on firm, level ground or 87% of full hydraulic capacity.
3. The load point is a hook located on the back of the bucket.
4. (*) indicates the load limited by hydraulic capacity.