3S Medical

ALL-IN-ONE

Automatic Dry suction device with Dry air compressor device for Dental unit chair

Sucition

Compressor



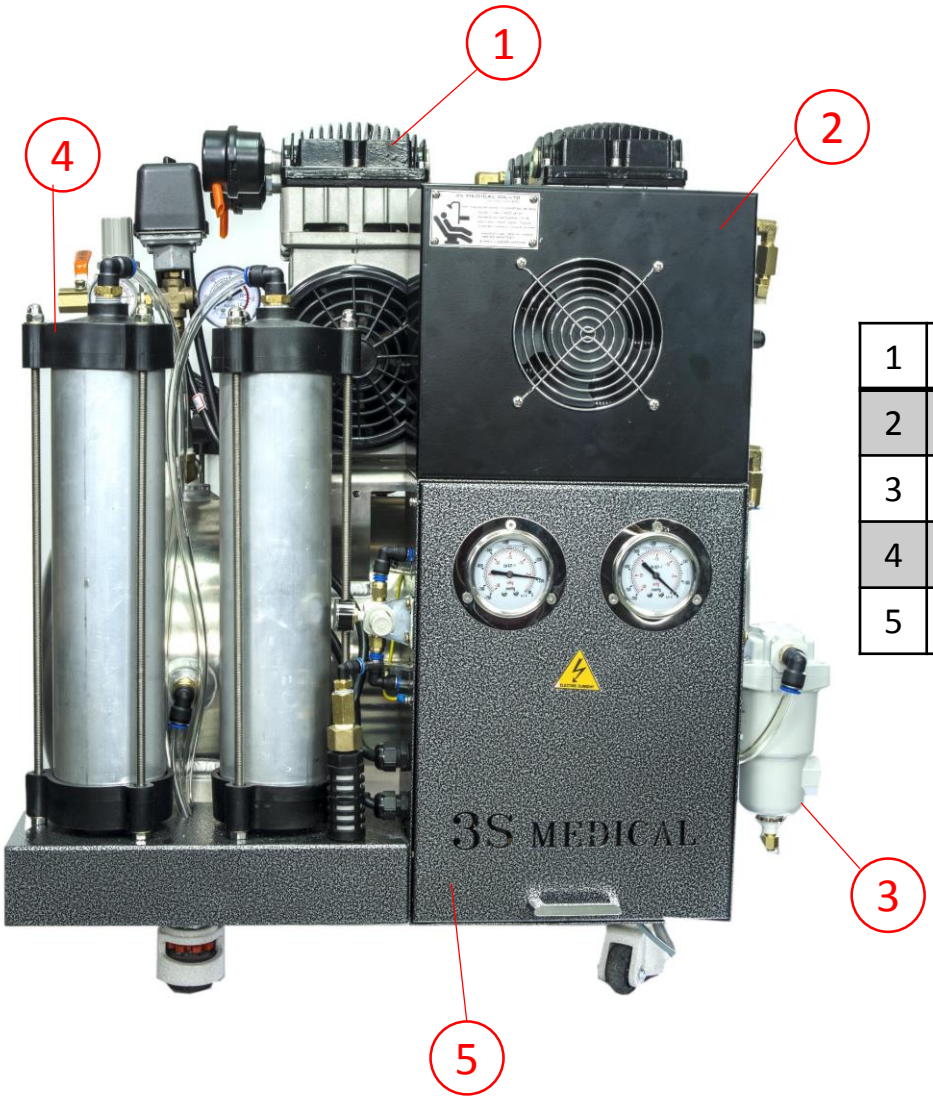

1	Oilless Air compressor
2	Fin Coil Type Air Cooler
3	Auto Drain-Bacteria Filter
4	Dual operation Air Drier
5	Purge controller

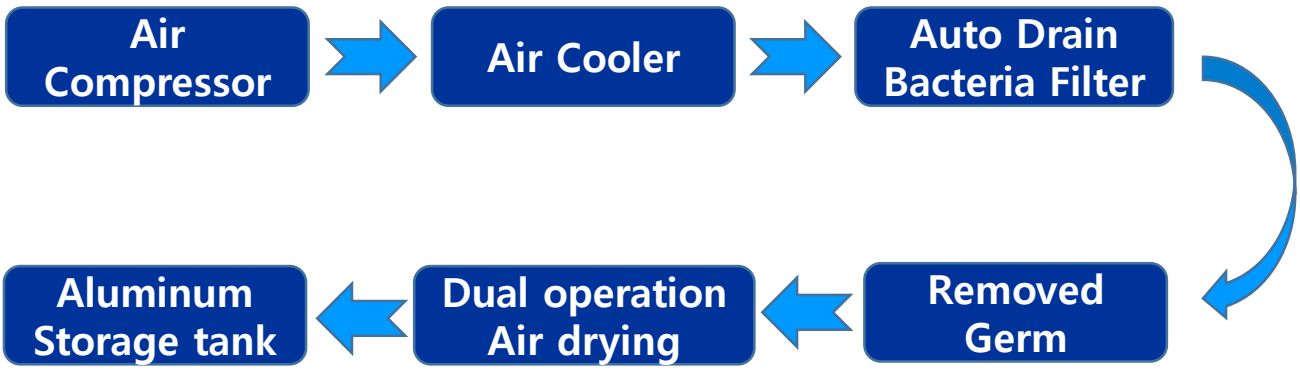

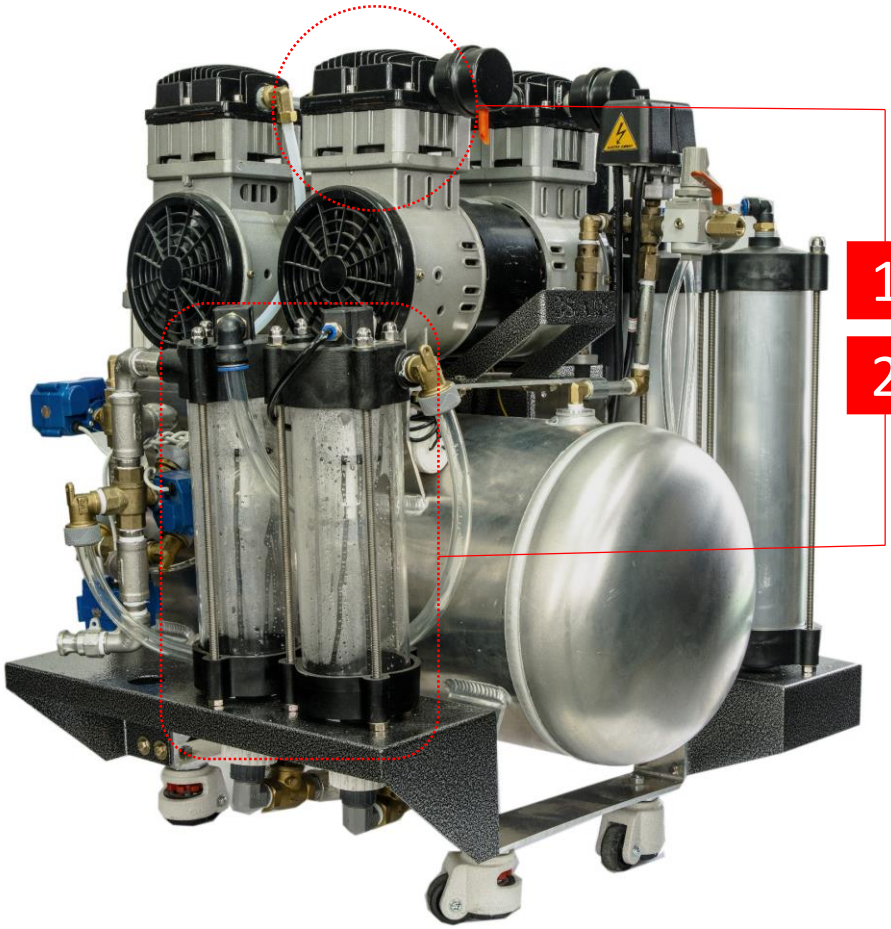

1 Constant vacuum maintenance of distance using compressor method

2 The patented dual-port separator keeps the waste liquid in a vacuum that is disconnected from the outside, and uses the powerful discharge pressure of the compressor to continuously separate the waste liquid as well as the odor

Suction flow

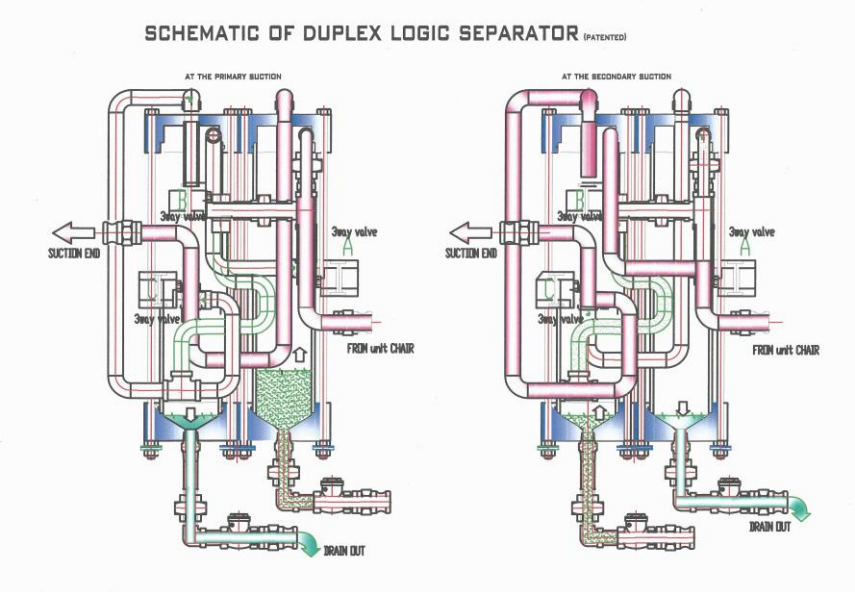

When the first waste liquid separator absorbs the waste liquid by the logical piping circuit of the two consecutive waste liquid absorbing separators and is filled in the absorption separating tower, it is transferred to the second waste liquid separator by the water level sensor, The pressure is switched to the positive pressure state and the filled waste liquid is forcibly discharged to the discharge port. This method is continuously carried out to absorb and separate the waste liquid electronically, and only clean air flows into the vacuum compressor