LINEAR POSITION(LP) SENSOR

MODEL DSC LP SENSOR

Dong-Suh Control Co.,Ltd.

FEATURES

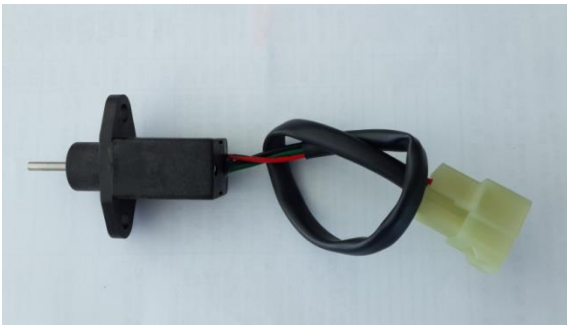

DIMENSIONS

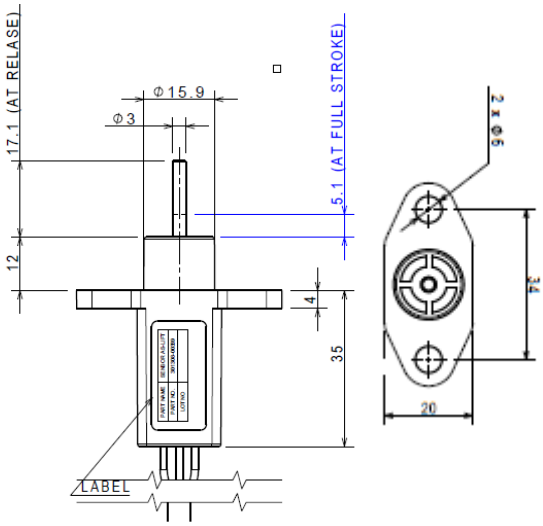

WORKING DIAGRAM

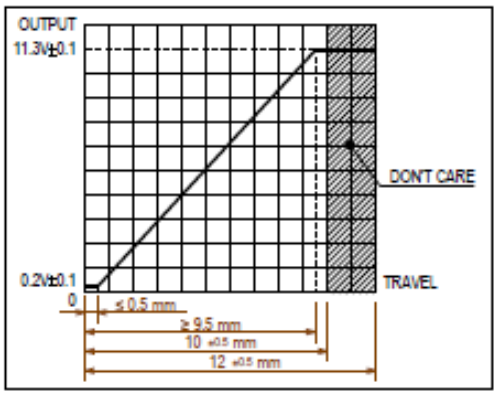

DESCRIPTION

As DSC LP Sensor(Linear Position Sensor) is non-contacted type, it gives the driver more comfortable, durable reliability and stable operation by reducing noise and failure. This could be applied instead of existing metal-to-metal contacted type without big change.

APPLICATION

DSC LP Sensor is designed for all of applications of Industrial vehicle, Heavy machinery equipment, Agricultural machine and automotive etc. for requiring higher durable reliability and less noise at operating.

FEATURES

- Non-contacting Sensing Technology
- Spring Force
  - Initial Load : 120gf Min
  - Full Throttle : 370gf Max
- Electrical Travel : 10±0.5
- Mechanical Travel : 12mm Max
- Mechanical Endurance Life : 3,000,000cycles
- Protection Degree : IP54

SPECIFICATIONS

- Operating Temperature : -20℃ to +85℃
- Storage Temperature : : -30℃ to +95℃
- Operation Voltage : DC12V
- Operation Current : Max 25mA
- Reverse Polarity : Within 10min
- Independent Linearity : ±2%
- Single Load : 10Kohms, C=4.7nF Tested
- Water Protection : IP54

www.dscontrol.co.kr

Note: As all contents in this catalogue is the typical information, it is subject to change without notice for product improvement and it could be different depending on the products.