Loudspeaker Specification Sheet

Model Number : BH11L028

Revision : Rev 00.
Date : 20.JUN.17

Features:

- Driver Type : Mid Woofer
- Size : 34mm (1.3inch)
- Magnet : Ferrite
- Frame : Plastic
- Diaphragm : Black Mylar



Specifications:

- Rated Power Handling : 3W (RMS)
- Characteristic Sensitivity : 76.5dB ± 2dB (1W/1m)
- Nominal Impedance : 8Ω
- Free Air Resonance Frequency, fs : 370Hz ± 20%
- Frequency Range : fs ~ 20kHz ± 20%
- Voice Coil Inner Diameter : Ø13.28 (mm)
- Net Weight : 93g (3.2oz)

Dimensions & Mounting Information:

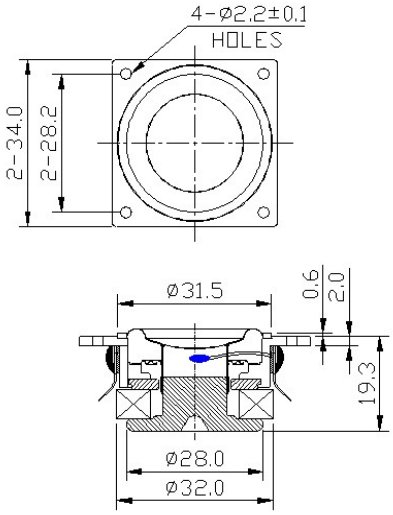

Frequency & Impedance Response:

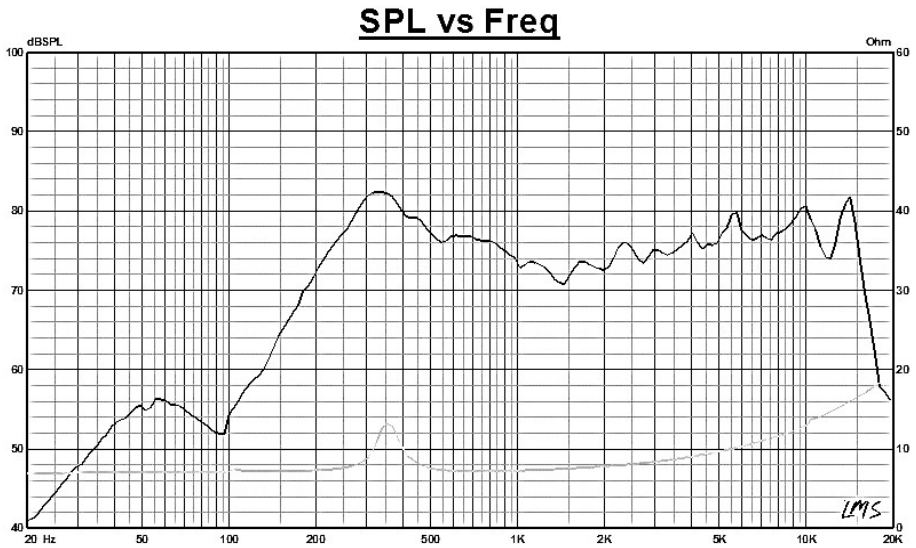

http://www.bhacoustic.com
105, Sinwon-ro, Yeongtong-gu, Suwon-si, Gyeonggi-do, Republic of Korea 16678
Tel : +82(31)-206-5477 Fax : +82-(21)-206-5473