Patented

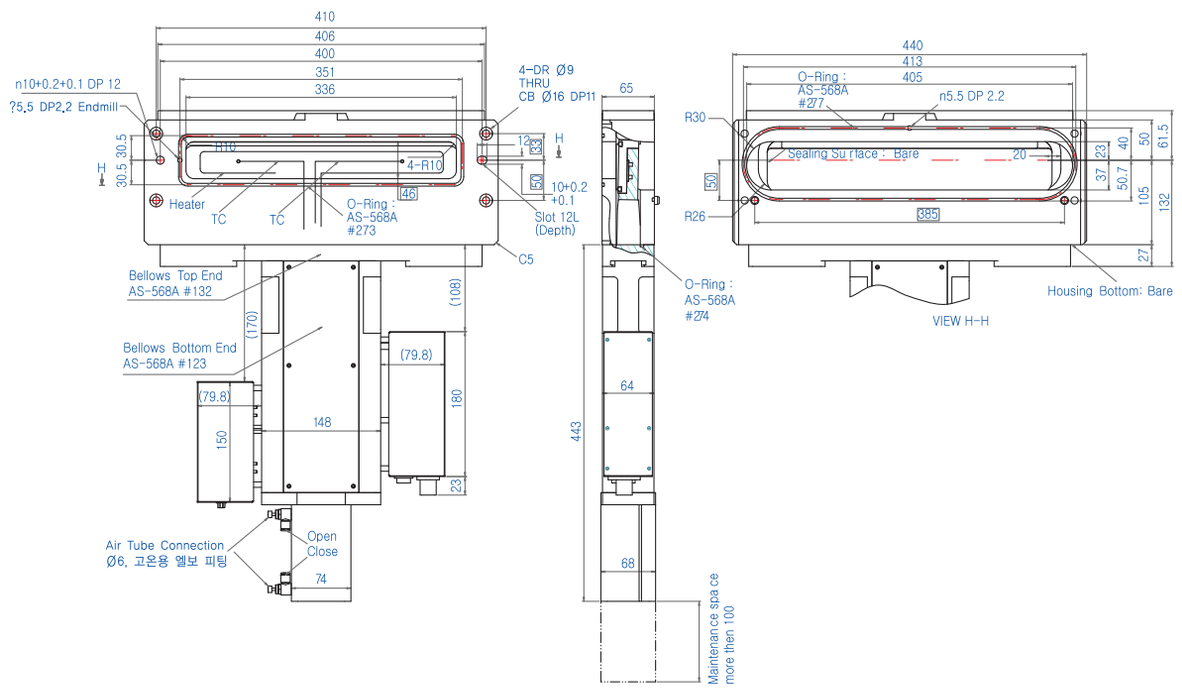

SIZE : 32X222, 46X236, 50X336, 50X340, 50X350(Custom sizes available)

Dimensions Sample

Specifications

Pressure range		1 X 10^{-9}mbar to 1.2bar
Leak rate : body, seat		〈 1 X 10^{-9}mbar.ℓ/s
Differential pressure on the gate		≤ 1.2bar in either direction
Material	Valve body, bonnet seal, blade	AL6061
	Welded bellows	AM350
	Valve actuator	SS316L, AL6061
Seal Materials		FFKM(Kalrez©, Chemraz©)
Temperature	Valve body	180° C
	Valve actuator	100° C
Operation		Double acting
Cycle until first service		1million
Position sensor		Honeywell(11SM-244-T, JS-5)

PRESYS Company specification and/or test data may not be copied, reproduced or referenced without express written permission of PRESYS.

