Dual(CO&H_2S) Gas Sensor

Product Data Sheet
Model #SS21CH

Applications

- Ideal for portable instrument
- Industry safety (ambient air monitoring applications)
- Residential CO alarms
- Sewers, Wastewater treatment, Mining
- Etc.



Specifications

Performance Characteristics	
Output Signal	80±20 nA / ppm CO / 775±275 nA / ppm H_2S
Typical Baseline Range (pure air)	≤±2 ppm CO / ≤±0.5 ppm H_2S equivalent
T90 Response Time	<30 seconds
Measurement Range	0-500 ppm CO / 0~200ppm H_2S
Maximum Overload	2,000 ppm CO / 500ppm H_2S
Linearity	Linear
Repeatability	≤±3% CO / ≤±2% H_2S equivalent
Recommended Load Resistor	10 ohms
Resolution (Electronics Dependent)	≤0.5 ppm typical
Environmental	
Temperature Range Continuous	-20℃ to +50℃
Pressure Range	800 to 1200 mbar
Operating Humidity Range	15% to 90% Rh
Life Time	
Long Term Output Drift	≤5% per annum
Recommended Storage Temp	0℃ to 20℃
Expected Operating Life	≥24 months in air
Standard Warranty	24 months from data od dispatch
Intrinsic Safety Data	
Maximum at 2,000ppm	0.3mA
Maximum o/c Voltage	<1.3V
Maximum s/c Current	<1.0A

Dimension

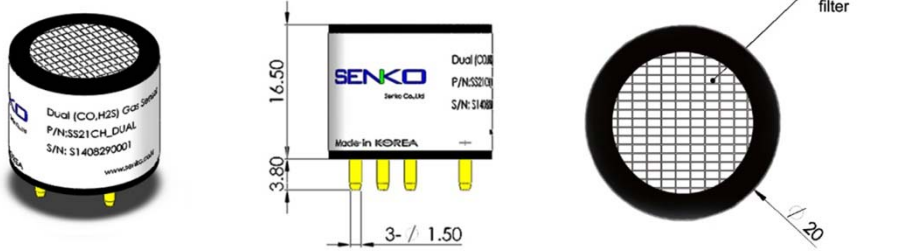

Due to ongoing research and product improvement, specifications are subject to change without notice

SENKO.CO.Ltd, 73, Oesammi-ro 15beon-gil, Gyeonggi-do, 447-230, South Korea
Telephone:+82-31-492-0445 Fax:+82-31-492-0446 E-mail:sales@senko.co.kr Website:www.senko.co.kr

Dual(CO&H_2S) Gas Sensor

Product Data Sheet
Model #SS21CH

Cross sensitivity

Gas	Concentration [ppm]	Reading [ppm]	
		CO Channel	H_2S Channel
Hydrogen Sulfide	25	<5	25
Carbon Monoxide	100	100	<2
Hydrogen	100	<30	<0.05
Sulfur Dioxide	5	0	<1
Nitric Oxide	35	<0.1	<1
Nitrogen Dioxide	5	<0.1	0

Standard operating circuit

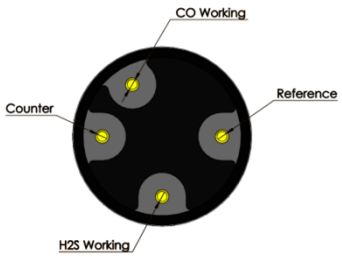

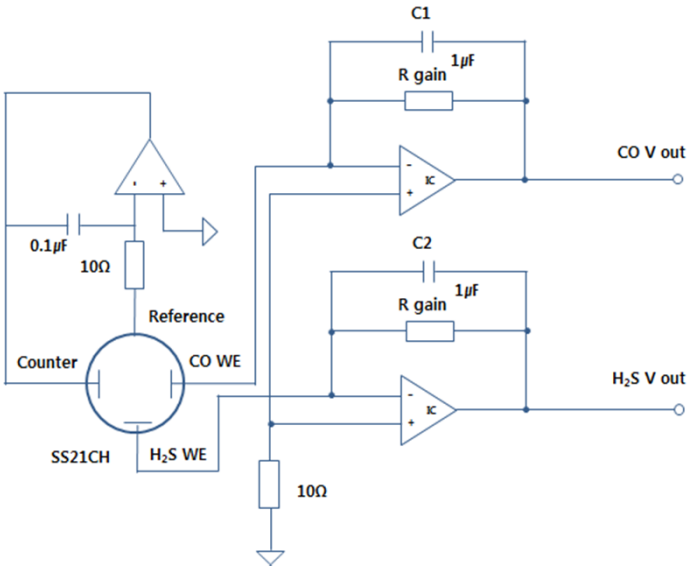

Due to ongoing research and product improvement, specifications are subject to change without notice

SENKO.CO.Ltd, 73, Oesammi-ro 15beon-gil, Gyeonggi-do, 447-230, South Korea
Telephone:+82-31-492-0445 Fax:+82-31-492-0446 E-mail:sales@senko.co.kr Website:www.senko.co.kr