

TSM-35M03

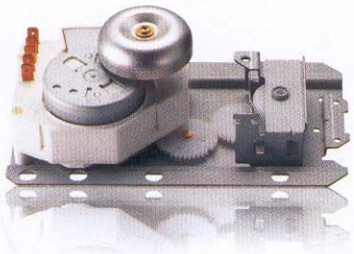

Specifications

CODE NO.	Motor Rating	In.	Time	STG V	WATT	AMP.	S/W1 Rating	S/W2 Rating	Remark
TSM-35M01A3	21V-50Hz	'E'	10MIN. /200° - 35MIN. /300°	<17.8V	<3W	<185mA	250VAC/15A	250VAC/8A	
TSM-35M02A3	21V-50Hz	'E'	10MIN. /200° - 35MIN. /300°	<17.8V	<3W	<185mA	250VAC/15A	250VAC/8A	
TSM-35M03A2	21V-60Hz	'A'	10MIN. /200° - 35MIN. /300°	<17.8V	<3W	<185mA	125VAC/15A	125VAC/16A	
TSM-35M04A2	21V-60Hz	'A'	10MIN. /200° - 35MIN. /300°	<17.8V	<3W	<185mA	125VAC/15A	125VAC/16A	
TSM-35M05A3	21V-50Hz	'E'	10MIN. /200° - 35MIN. /300°	<17.8V	<3W	<185mA	250VAC/15A	250VAC/8A	

DRAWING

UNIT : Millimeters

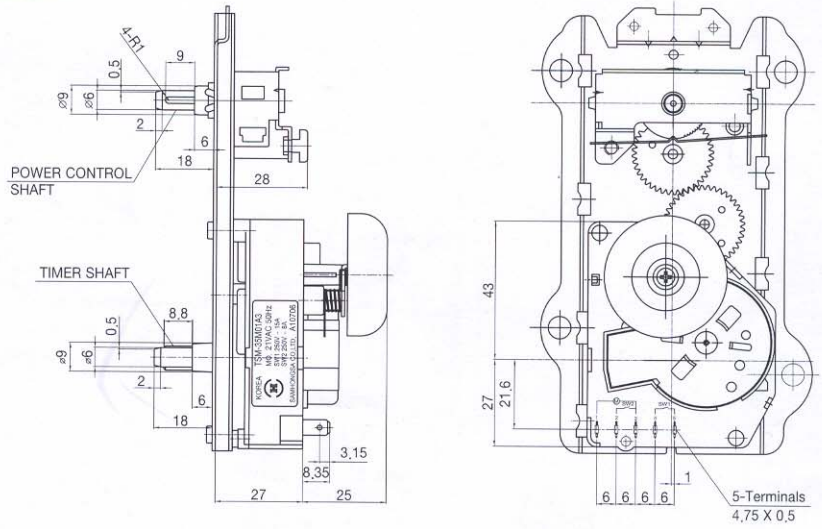

TSM-35M03A2

