DAEHAN SENSOR

Liquid Level Float Switches

Mini Float Type Level Switches

DF – Series

Level Switch with contact output

Product Name

DLF – 4P – 1P



CE

RoHS

INNOBIZ

ISO 9001 인증업체

1993 DAEHAN SENSOR CO., LTD.
All rights reserved

Table of Contents

1. Introduction 3

2. Features 3

3. Specification 3

4. Installation 4

5. Surge Protection 4

6. Wiring Connection 5

7. Check Point Before A/S 6

Media : Only Liquid

Wiring : 2 wire

Input : DC 24V / AC 220V
(AC : protection circuit required)

Contact Rat. : 0.5A / 1A

Output Signal : 4 Point (N/O or N/C)

Temperature : A.M.B

Material : Stem – SUS304
(Option – SUS316)
Float – P.P
E ring – SUS304
(Option – SUS316)
Wire – AWG 22 (1015)
(Option – Tefron)

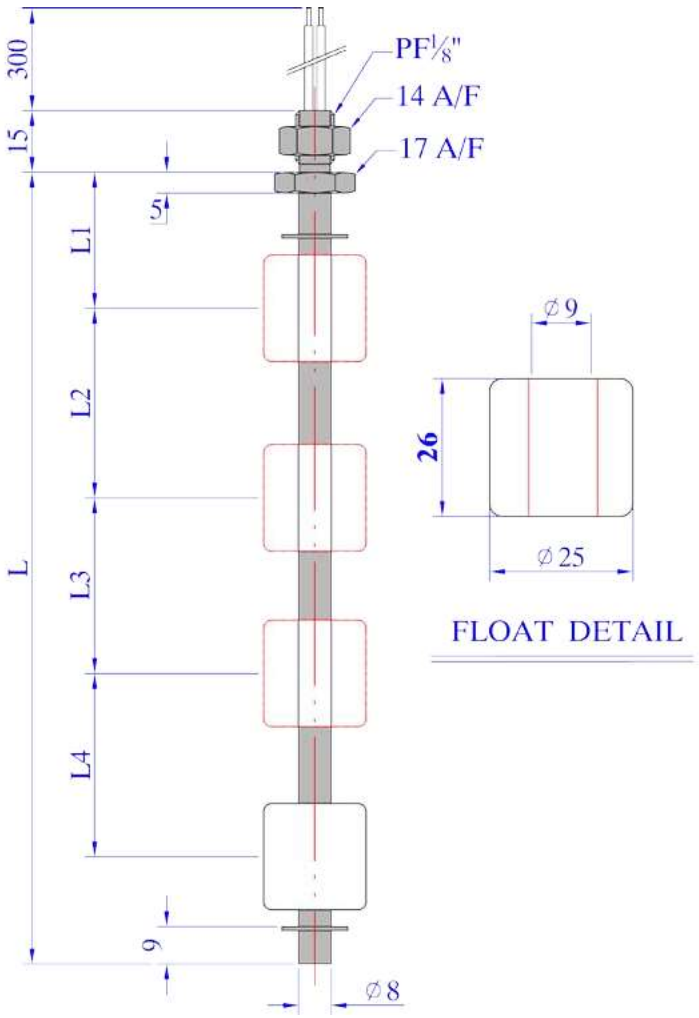

Introduction

DLF is mini-float level switch for controlling small size tanks.
Reed switch in the sensor operates as the float moves up and down in which a permanent magnet installed.
This is a level switch using on/off signal from the relay.

Features

This mini sensor is for indicating liquid level and high level alarming to control.

It is usually used in semiconductor, medical equipment, chemical, and fuel tanks.

It is cost-effective, simple to set-up, very dependable and durable.

◎ Cautions ◎

Check the suiability between sensor specification and where to install.

Suggest to use a protetion pipe when suspened solid exist in the tank.

Should not use for a liquid adhesive.

Should not alter the location of sensor's Stopper.

Be cautions not to bend sensor.

Do not impact on Sensor.

Installation

As shown in the picture, it is installed and using.

Check if the flanges specification match between Tank and product.

Insert a float and stem into the tank and make sure that it is installed vertically right.

Connect wiring between sensor contact terminals and controller.

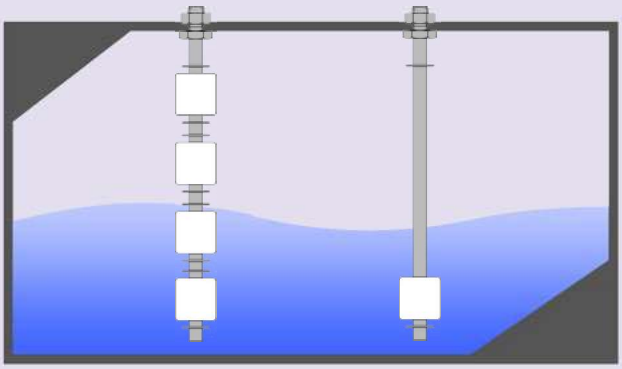

◎ Cautions ◎

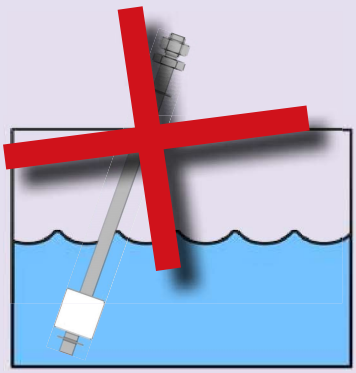

Install the sensor so that it is perpendicular.

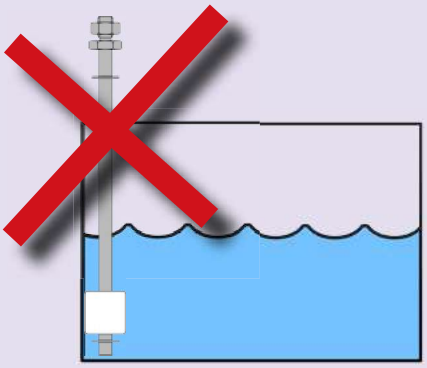

Float of the sensor does not touch the wall of the tank.

Surge Protection

Model : DLF – SUG

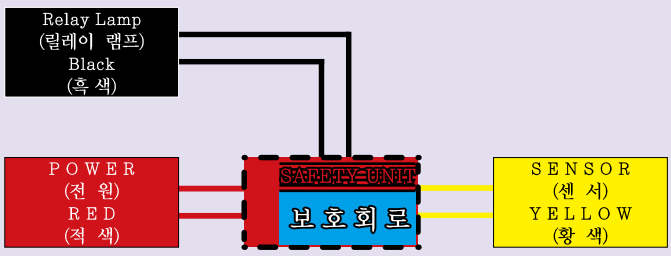

1. Any Impact on DLF–Sensor can affect the electrical.

2. In case of using DLF–Sensor where the inductive load exists, surge voltage may cause damage to the Dry Reed Switch, it is recommended to configure the protection circuits.

3. The Electromagnetic caused by the movement of the coil or magnet, malfunction can occur and the electircal characteristics can be changed.

Wiring Connection

Wiring to a DC – Power Supply

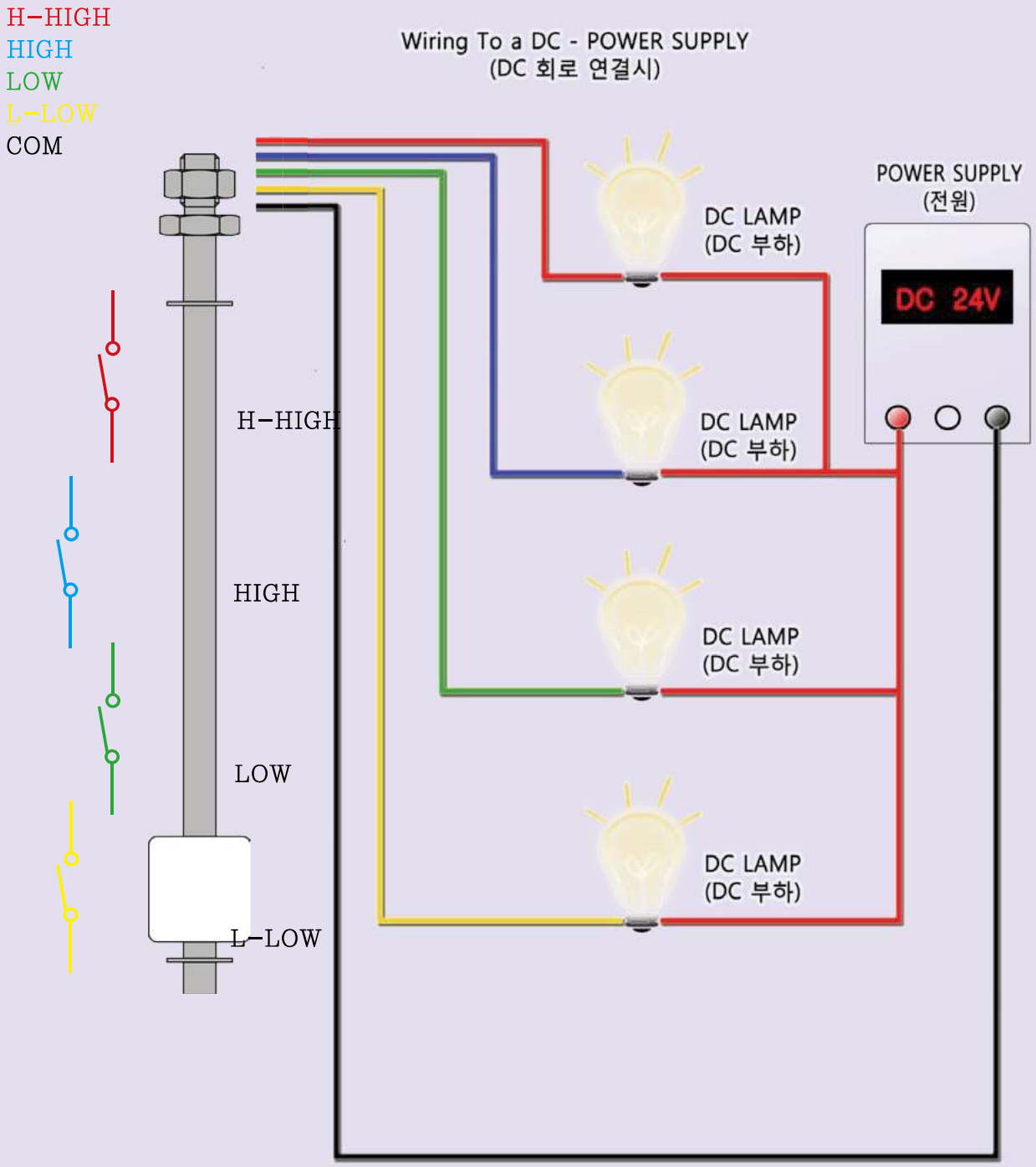

Wiring Connection

Wiring to a AC – Power Supply

H-HIGH
HIGH
LOW
L-LOW
COM

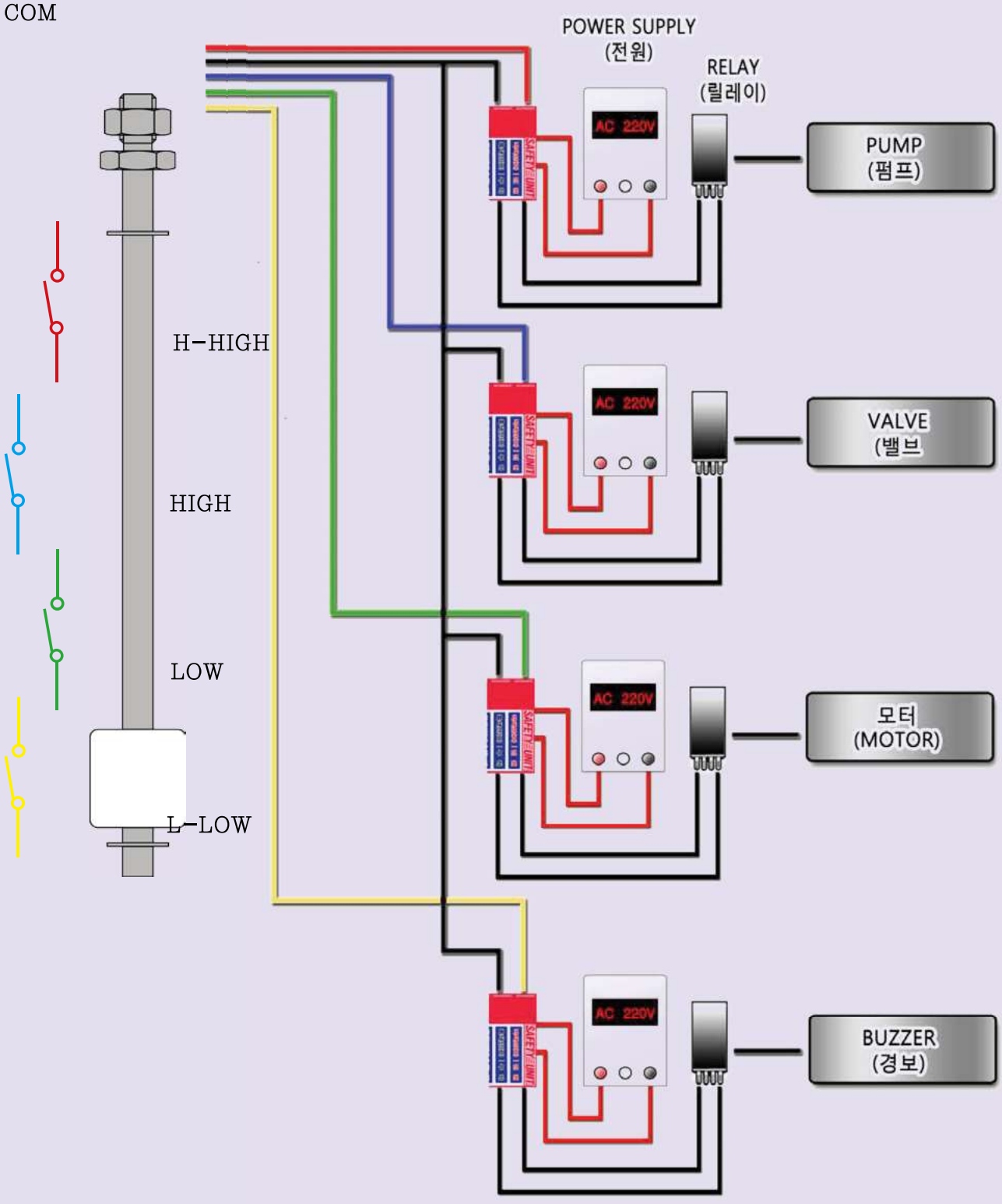

Check & A/S

The output signal is normal?
: Check if the output signals at certain contact points are normal.

The state of sensor, float, stopper (inside and outside) is normal?
: Check if water or liquid exists inside of the sensor.

The wiring is correct?
: Check the connect the wire short-circuit and / or poor contact.

* Installation and operation manual is subject to change without prior notice for quality improvement.

Head Office
94-2, Yongdap-dong, Seongdong-gu, Seoul, Korea

R&D Office
2-71, Jeonong-dong, Dongdaemun-gu, Seoul, Korea

Tel : 02-2213-9888(代) Fax : 02-2245-3482
e.mail : master@dh34.com Domain : www.dh34.com