Loudspeaker Specification Sheet

Model Number : BH10L059

Revision : Rev 00.
Date : 20.JUN.17

Features:

- Driver Type : Woofer
- Size : 77mm (3inch)
- Magnet : Ferrite
- Frame : Steel
- Diaphragm : Polypropylene



Specifications:

- Rated Power Handling : 15W (RMS)
- Characteristic Sensitivity : 81.5dB ± 2dB (1W/1m)
- Nominal Impedance : 8Ω
- Free Air Resonance Frequency, fs : 165Hz ± 20%
- Frequency Range : fs ~ 15kHz ± 20%
- Voice Coil Inner Diameter : Ø16.4 (mm)
- Net Weight : 338g (11.9oz)

Dimensions & Mounting Information:

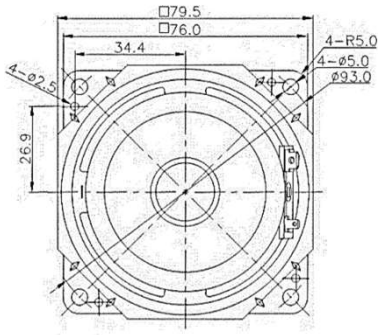

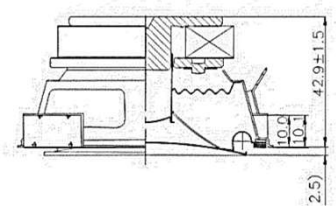

Frequency & Impedance Response:

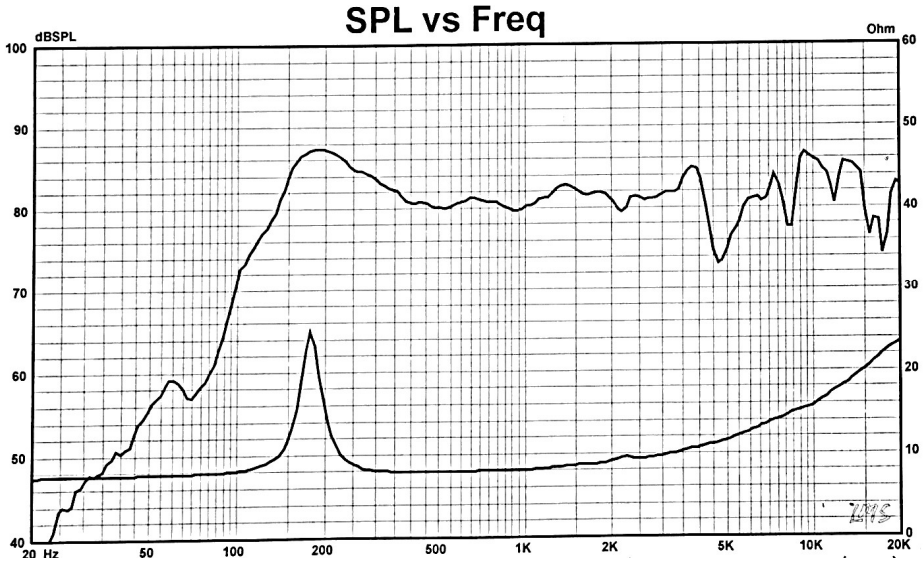

http://www.bhacoustic.com
105, Sinwon-ro, Yeongtong-gu, Suwon-si, Gyeonggi-do, Republic of Korea 16678
Tel : +82(31)-206-5477 Fax : +82-(21)-206-5473