TRUEN



TN-B3204U6R

- Sony 1/2” CMOS
- H.265/H.264/MJPEG
- Max 60FPS @ 1920 x 1080
- Built-in X4 Motorized Lens
- X10 Digital Zoom
- SRT (Secure Reliable Transport)
- RTSP/RTMP/MPEG-TS
- ONVIF (Profile S, Profile G)
- True WDR
- Hybrid CBR





www.truen.co.kr
os@truen.co.kr

TN-B3204U6R Specifications

Basic Specifications	
Image Sensor	1/2” Sony CMOS Sensor
Lens type	Auto DC Iris, Zoom lens, IR cut filter
Lens mount	Board mount
Minimum illumination	0 Lux (IR LED on), Color : 0.015 Lux (1/30, 50IRE)
Lens (wide to tele)	4x optical zoom ; f = 3.5 ~ 14.0mm
Shutter Speed	1/1 to 1/100000
Maximum Aperture Ratio	F1.53
Angle of View	Horizontal : 103.4°(wide) ~ 35.5°(tele) Vertical : 67°(wide) ~ 20.1°(tele)
Privacy masking	4 regions
Flip mode	Horizontal, Vertical
Image enhancement	AF, AWB, AE, NR, TDN, DSS, BLC, GAMMA, DPC, DEFOG, WDR
IR LED	850nm, 4pcs, 30m

Video	
Compression	H.265/H.264/MJPEG
Frame rate	Max 60fps @ 1920x1080
Bitrate	Primary : 32Kbps ~ 16Mbps, Secondary : 32Kbps ~ 4Mbps
Resolution	320x240 ~ 1920x1080
Streaming	Quad Streaming Primary : H.265/H.264, Secondary x 3 : H.265/H.264/MJPEG
Burn-in OSD	Multi-lingual

Audio	
Compression	G.711
Sampling rate	G.711 : 8 KHz
Bitrate	G.711 : 64Kbps
Streaming	Full-duplex
Input/Output	1 x Line-In (mono), 1 x Line-Out (mono)

Network	
Protocol	IPv4/v6, TCP, UDP, IGMP(Multicast), ICMP, DHCP, HTTP, HTTP, FTP, SNMP, SMTP, UPnP, WS-Discovery, Zero Configuration, NTP, SRT, MPEG-TS, RTP, RTSP, RTMP, DDNS
Security	Password protection, IP address filtering, HTTPS encryption
API	Truen protocol/SDK, ONVIF, PSIA, MPEG-TS
Interface	Ethernet 10/100/1000 base-T (RJ-45)

Event / Alarm	
Event sources	Motion, Sensor input, Client disconnection, Intrusion, Line crossing, Tampering, Abnormal video detection, Face detection, Sound detection, User defined event
Event actions	Notification(E-mail), FTP, PTZ preset, Alarm control, Recording
External devices	1 x Sensor-In (dry contact, NO/NC) 1 x Alarm-Out (dry contact, NO) 1 x RS-485 port : PTZ control etc.

General	
Power Supply	Min DC12V/1.5A, PoE(Power over Ethernet) : 802.3af
Power Consumption	DC12V/PoE : Max 12W
Operating Temperature	-10°C ~ 50°C (14°F ~ 122°F)
Storage Temperature	-10°C ~ 50°C (14°F ~ 122°F)
Operating Humidity	20% ~ 80% RH
Storage Humidity	20% ~ 80% RH
Edge Storage	Micro SD/SDHC/SDXC slot (Max 512GB)
Dimensions (W x H x D)	Ø120.5 x 391.5(L) [mm]
Weight	1,320g

DIMENSION

(mm)

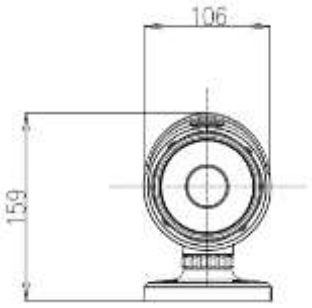

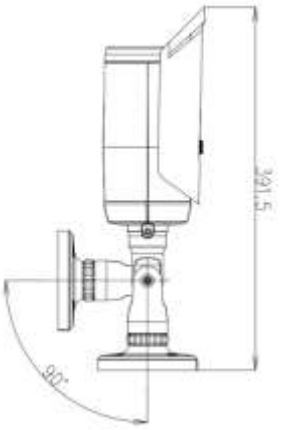



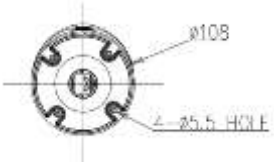

© Truen Co., Ltd. All rights reserved. Reproduction in whole or in part without written permission is prohibited. Features and specifications are subject to change without notice. The values for mass and dimensions are approximate. Please contact for specific models available in your region.