REVERSIBLE MOTOR

40W □90mm LEAD WIRE TYPE TERMINAL BOX TYPE

K9RS40N□

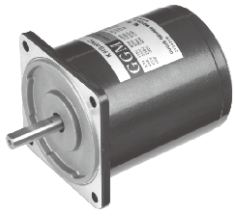

K9RS40N□-T, T5



SPECIFICATIONS

40W 30 minutes rating, four poles

Model		Voltage (V)	Frequency (Hz)	Current (A)	Start T. (N*m/ Kgf*Cm)	Rated T. (N*m/ Kgf*Cm)	Speed (rpm)	Condenser (μF)
K9R□40NJ(-T, -T5)	single-phase	100	50	1	0.3/3	0.315/3.15	1250	16
			60	1.13	0.33/3.3	0.255/2.55	1550	
K9R□40NU(-T, -T5)		110	60	0.8	0.2/2	0.26/2.6	1500	10
		115		0.83	0.22/2.2			
K9R□40NL(-T, -T5)		200	50	0.45	0.3/3	0.315/3.15	1250	4
			60	0.57		0.26/2.6	1500	
K9R□40NC(-T, -T5)		220	50	0.46	0.3/3	0.315/3.15	1250	3.5
			60	0.55	0.32/3.2	0.26/2.6	1500	
		230	50	0.55	0.4/4	0.315/3.15	1250	
			60	0.58	0.36/3.6	0.26/2.6	1500	
K9R□40ND(-T, -T5)		240	50	0.41	0.34/3.4	0.3/3	1300	3

□ : SHAFT SHAPE (S : STRAIGHT, G : PINION)

RATED TORQUE OF GEARHEAD

● 50Hz

unit = above : N·m / below : Kgf·cm

Model	Speed(rpm)	500	416	300	250	200	166	150	120	100	83	75	60	50	41	37	30	25	20	16	15	12.5	10	8.3	7.5
Motor/ Gearhead	Ratio	3	3.6	5	6	7.5	9	10	12.5	15	18	20	25	30	36	40	50	60	75	90	100	120	150	180	200
K9R□40N□(-T, -T5)		0.73	0.87	1.22	1.46	1.82	2.19	2.43	3.04	3.65	4.37	4.37	5.47	6.56	7.87	8.75	10	10	10	10	10	10	10	10	10
K9G□B(C)		7.3	8.7	12.2	14.6	18.2	21.9	24.3	30.4	36.5	43.7	43.7	54.7	65.6	78.7	87.5	100	100	100	100	100	100	100	100	100

● 60Hz

unit = above : N·m / below : Kgf·cm

Model	Speed(rpm)	600	500	360	300	240	200	180	144	120	100	90	72	60	50	45	36	30	24	20	18	15	12	10	9
Motor/ Gearhead	Ratio	3	3.6	5	6	7.5	9	10	12.5	15	18	20	25	30	36	40	50	60	75	90	100	120	150	180	200
K9R□40N□(-T, -T5)		0.62	0.74	1.03	1.24	1.55	1.86	2.07	2.58	3.10	3.72	3.72	4.65	5.58	6.69	7.44	8.37	10	10	10	10	10	10	10	10
K9G□B(C)		6.2	7.4	10.3	12.4	15.5	18.6	20.7	25.8	31.0	37.2	37.2	46.5	55.8	66.9	74.4	83.7	100	100	100	100	100	100	100	100

* Gearhead and decimal gearhead are sold separately.
* The code in □ of gearhead model is for gear ratio.
* color indicates that the output shaft of the geared motor rotates in the same direction as the output shaft of the motor. Others indicate rotation in the opposite direction.
* If you are to have less ratio than the ratio in the table, you can install the decimal gearhead, which has one tenth of the ratio, between the gearhead and the motor. In this case, the permissible torque is 10N·m/100kgf·cm.
* RPM is based on motor's synchronous rpm (50HZ:1500rpm, 60HZ:1800rpm) and calculated by dividing gear ratio. Actual rpm is 2~20% less than indicating rpm according to load size.

GEARHEADS

DIMENSIONS

K9RS40N□

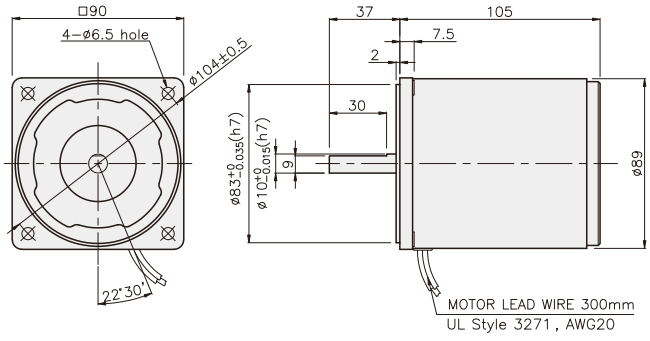

K9RS40N□-T

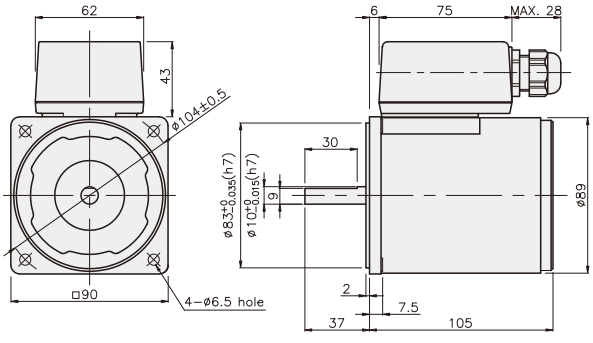

K9RS40N□-T5

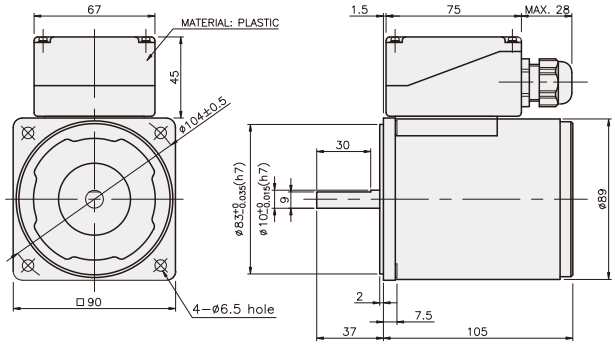

CONNECTION DIAGRAMS

K9RS40N□

single phase motor

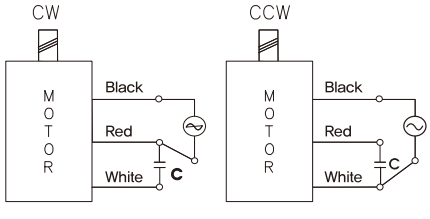

three phase motor

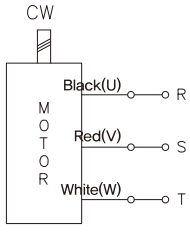

connecting two leadwires of U,V,W in turns

※The direction of motor rotation is as viewed from the front shaft end of the motor

K9RS40N□-T

single phase motor

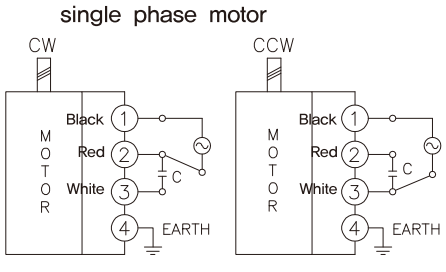

three phase motor

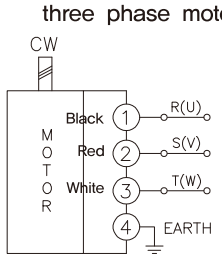

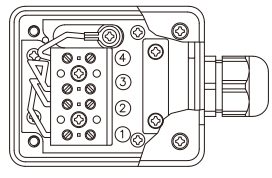

※The direction of motor rotation is as viewed from the front shaft end of the motor

K9RS40N□-T5

single phase motor

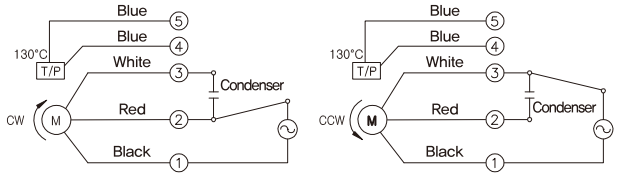

three phase motor

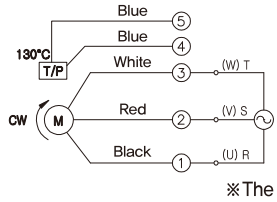

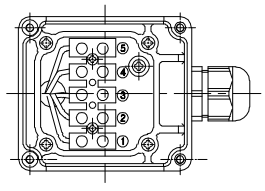

connecting two leadwires of U,V,W in turns

※The direction of motor rotation is as viewed from the front shaft end of the motor

GEARHEADS

DIMENSIONS

K9G□B(C)



DECIMAL GEARHEAD

K9G10BX

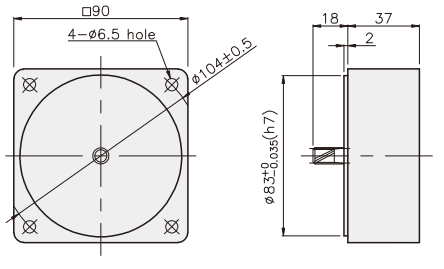

GEAR HEAD

K9G□B(C)

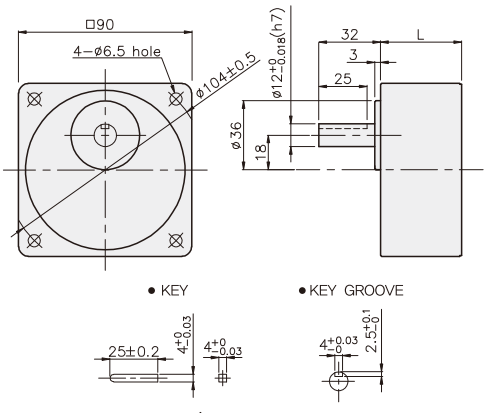

GEARHEADS

DIMENSIONS

K9RG40N□ + K9G□B(C)



K9RG40N□-T(-T5) + K9G□B(C)



DIMENSION TABLE

PART No	L	Application Model	Mounting BOLT
01	42	K9G3~18B(C)	M6 P1.0 X 65
02	60	K9G20~200B(C)	M6 P1.0 X 80
03	37	K9G10BX	M6 P1.0 X 120

WEIGHT

PART		WEIGHT(kg)
MOTOR		2.36
DECIMAL GEAR HEAD		0.60
GEAR HEAD	K9G3~18B(C)	0.78
	K9G20~40B(C)	1.04
	K9G50~200B(C)	1.14

K9RG40N□ + K9G□B(C)

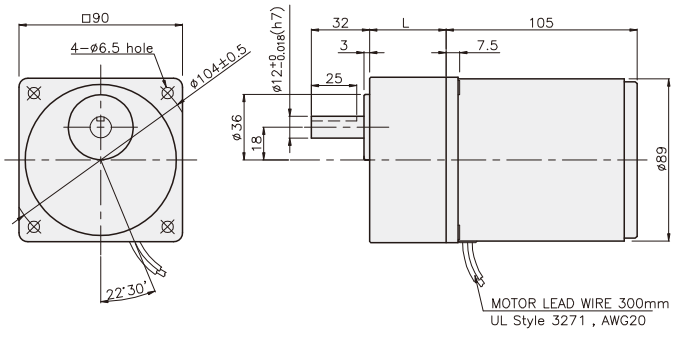

DIMENSION TABLE

PART No	L	Application Model	Mounting BOLT
01	42	K9G3~18B(C)	M5 P1.0 X 65
02	60	K9G20~200B(C)	M5 P1.0 X 80
03	37	K9G10BX	M5 P1.0 X 120

WEIGHT

PART		WEIGHT(kg)
MOTOR		2.52
DECIMAL GEAR HEAD		0.60
GEAR HEAD	K9G3~18B(C)	0.78
	K9G20~40B(C)	1.04
	K9G50~200B(C)	1.14

K9RG40N□-T + K9G□B(C)

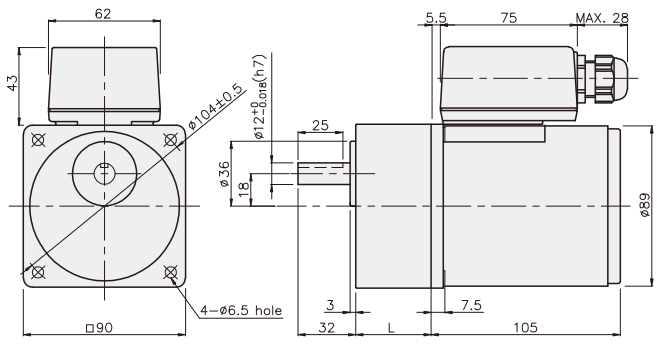

DIMENSION TABLE

PART No	L	Application Model	Mounting BOLT
01	42	K9G3~18B(C)	M5 P1.0 X 65
02	60	K9G20~200B(C)	M5 P1.0 X 80
03	37	K9G10BX	M5 P1.0 X 120

WEIGHT

PART		WEIGHT(kg)
MOTOR		2.52
DECIMAL GEAR HEAD		0.60
GEAR HEAD	K9G3~18B(C)	0.78
	K9G20~40B(C)	1.04
	K9G50~200B(C)	1.14

K9RG40N□-T5 + K9G□B(C)

