CRYOGENIC GLOBE VALVES

BOLTED BONNET

GL CLASS 600

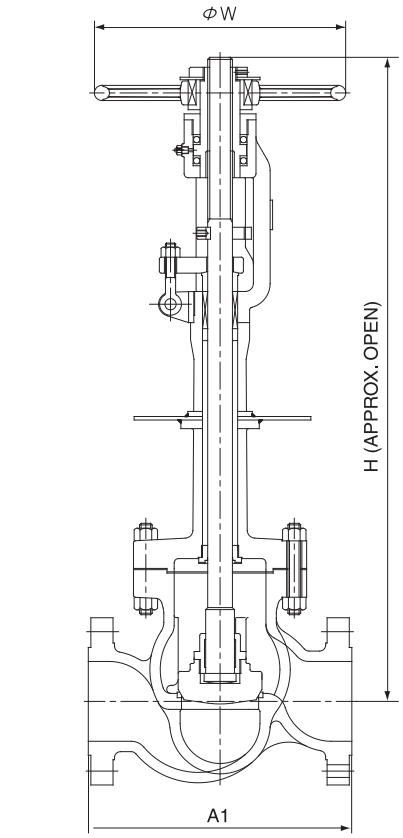

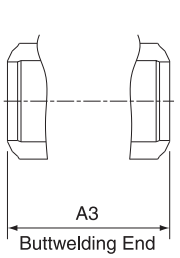

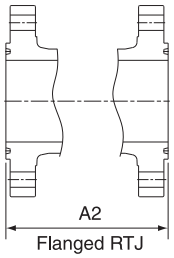

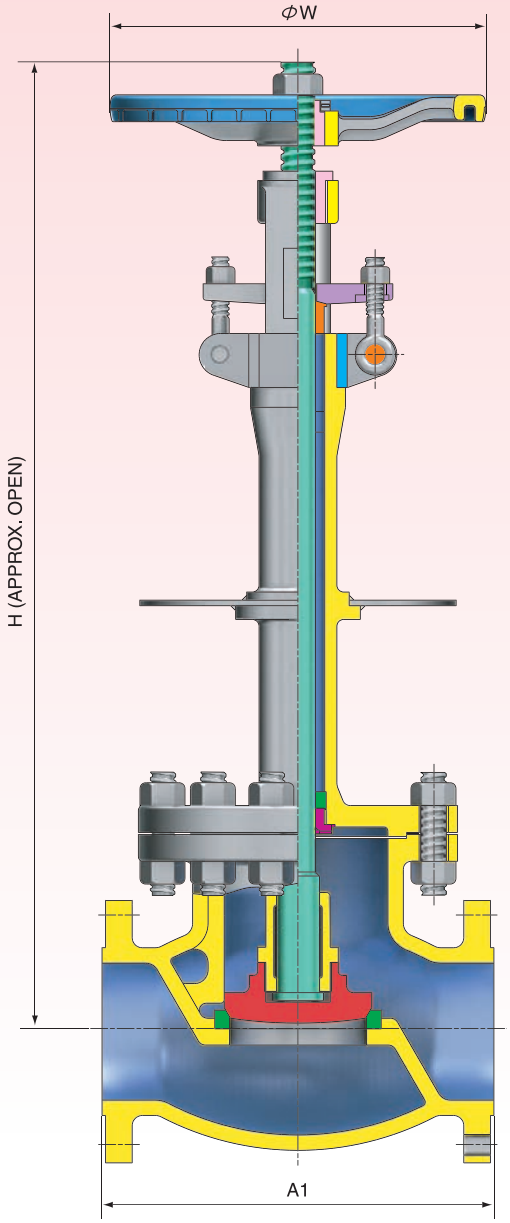

VALVE SIZE	in	2	2.5	3	4	6	8
	mm	50	65	80	100	150	200
A1 & A3	in	11.5	13.0	14.0	17.0	22.0	26.0
	mm	292	330	356	432	559	660
A2	in	11.6	13.1	14.1	17.1	22.1	26.1
	mm	295	333	359	435	562	664
H	in	27.8	31.6	31.7	34.2	41.7	44.3
	mm	707	802	805	868	1059	1125
W	in	11.0	14.0	17.7	22.0	28.0	31.5
	mm	280	355	450	560	710	800
WEIGHT RF	lb	154.3	176.4	198.4	339.5	749.6	1433
	kg	70	80	90	154	340	650
WEIGHT BW	lb	121.3	143.3	172.0	297.6	705.5	1254
	kg	55	65	78	135	320	570