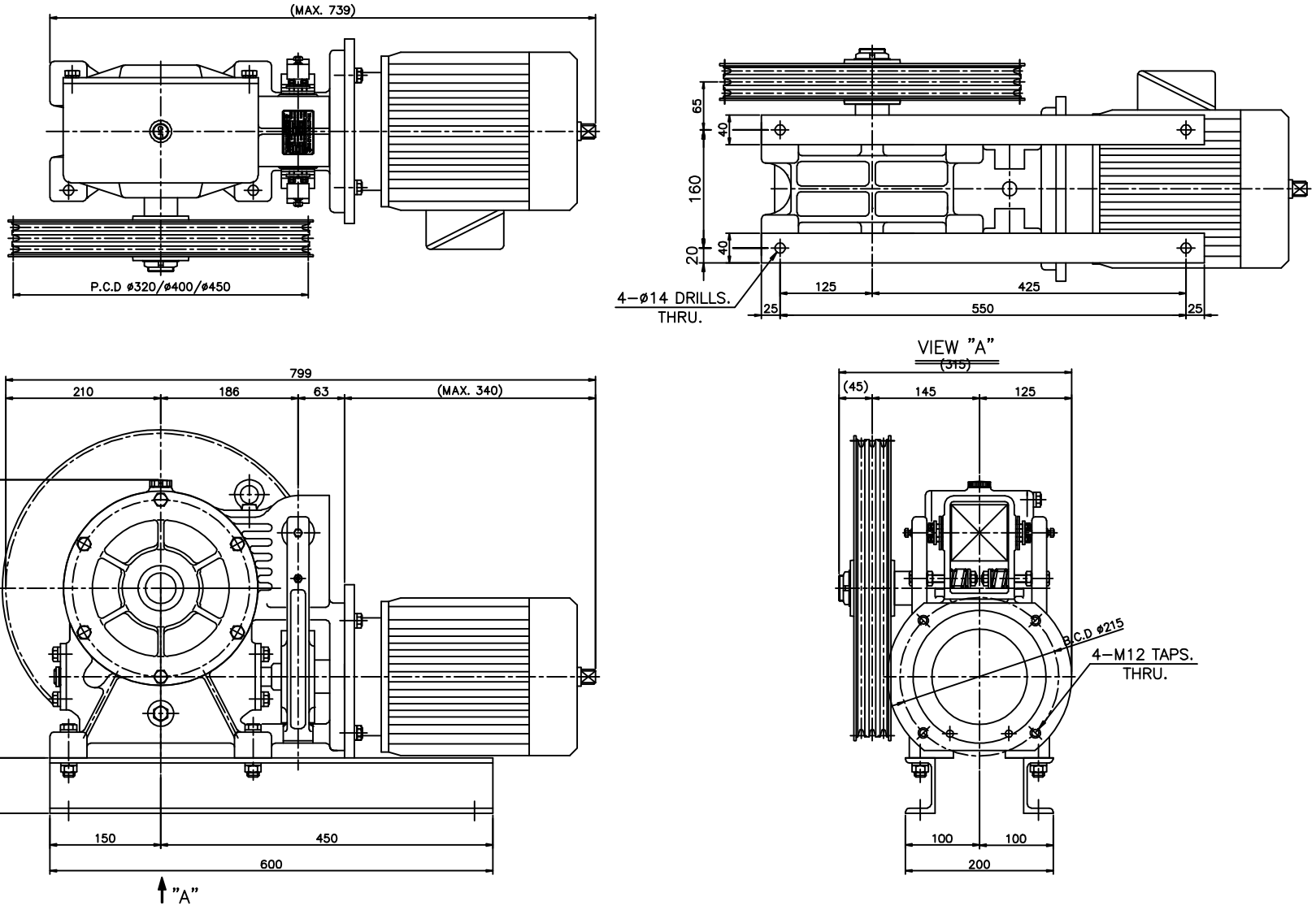
(MAX. 739)
P.C.D ø320/ø400/ø450
65
40
160
40
20
4–ø14 DRILLS.
THRU.
125
425
25
550
25
VIEW "A"
(315)
(45)
145
125
P.C.D ø215
4–M12 TAPS.
THRU.
100
100
200
799
210
186
63
(MAX. 340)
452
147
305
230
75
150
450
600
"A"