PSV

Short-Type Power Vise



- Short-body precision power vise with adjustable torque

POWER VISE

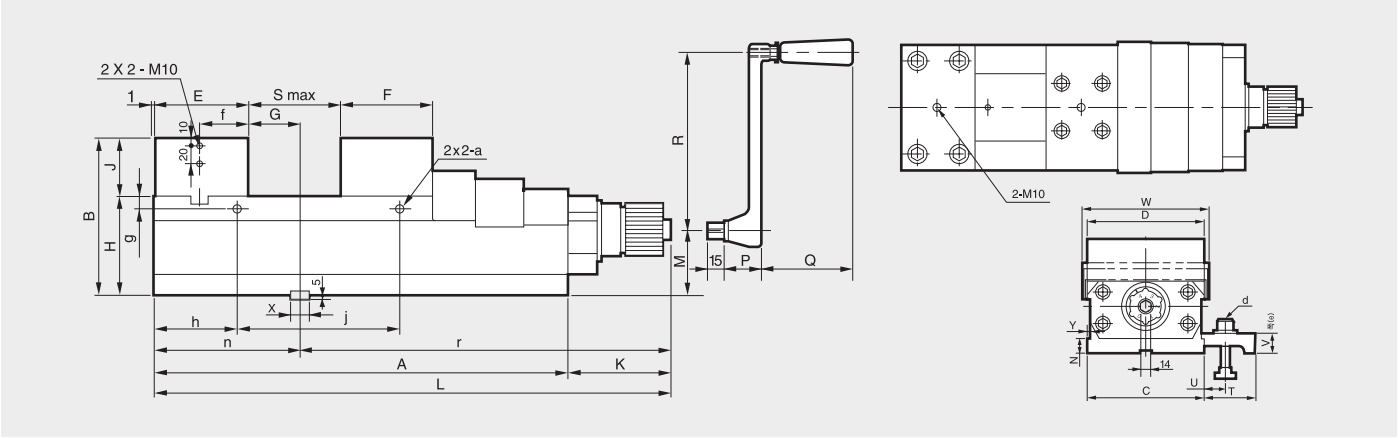

Dimensions

	A	B	C	D	E	F	G	H	J	K	L	M	N	P	Q	R	S
PSV-125(5")	295	135	126	125	84	76	60	85	50	105.5	400.5	50	21	37	95	180	125
PSV-160(6")	350	160	161	160	94	86	50	100	60	105.5	455.5	65	21	37	95	180	160

	T	U	V	W	X	Y	a	b	e	f	g	h	j	j1	n	r
PSV-125(5")	72	15~31	30	135	18	6	M10	M16x65	45	42	12	95	105	105	145	150
PSV-160(6")	72	15~31	30	170	18	7	M10	M16x65	45	47	12	105	140	140	145	450.5

Specifications

Type	Jaw Width	Jaw Height	Max. Opening	Total Height	Slider Height	Total Width	Total Length	Max.Gripping Force	Weight
	[mm]	[mm]	[mm]	[mm]	[mm]	[mm]	[mm]	[kN(kgf)]	[kgf]
PSV-125(5")	125	50	125	135	85	135	400.5	35(3571)	41
PSV-160(6")	160	60	160	160	100	170	455.5	60(6122)	62

※ Specifications are subject to change without notice.