BREATHER VALVE Section 1.4

PRESSURE VACUUM RELIEF VALVE WITH STEM JACKET

KSBBJ/JS TYPE PRESSURE VACUUM VALVE



The model KSBBJ and KSJS pressure vacuum valves are an advanced design for vent to atmosphere applications. Designed manufactured and tested according to the API 2000 code, these valves utilize the latest technologies to provide protection against positive or vacuum over pressure and prevent air intake, evaporative losses of product and help to contain odorous and potentially explosive vapours.

Introduction

Some special fluid or gases are sublimated at room temperature. The safety of tank is kept by the supply of external heat and the normal operation of valve disc (pallet) for venting.

Model KSJS type are designed and manufatured to supply the stem through the stem traced of the main valve.

These pressure vacuum valves maintain a tight seal until system pressure or vacuum exceeds the set pressure.

The valves allow an intake of air under constant pressure during emptying, or discharge excessive over pressure during filling of the tanks.

The KSBBJ is a weighted pallet model designed to handle pressure and vacuum with a minimum pressure of +/-20mmW.C and a maximum setting of +/- 700mmW.C

The KSJS is a spring loaded model designed to handle pressure and vacuum with a minimum pressure of +/-700mmW.C and a maximum setting of +/- 7,000mmW.C.

Body materials are available in 304SS and 316SS with various trims to suit individual requirements.

Sizes range from 50mm through to 300mm with ANSI 150lb FF flanges as standard. (Different connections available on request).

TOPSAFE #100, Seobu-ro 1293beon-gil, Juchon-myeon, Gimhae-si, Gyeongsangnam-do 50877, Korea
Tel.+82-(0)55-338-9986 Fax.+82-(0)55-338-9987 E-mail: topsafe@topsafe.co.kr

BREATHER VALVE Section 1.4

PRESSURE VACUUM RELIEF VALVE WITH STEM JACKET

KSBBJ/JS TYPE PRESSURE VACUUM VALVE

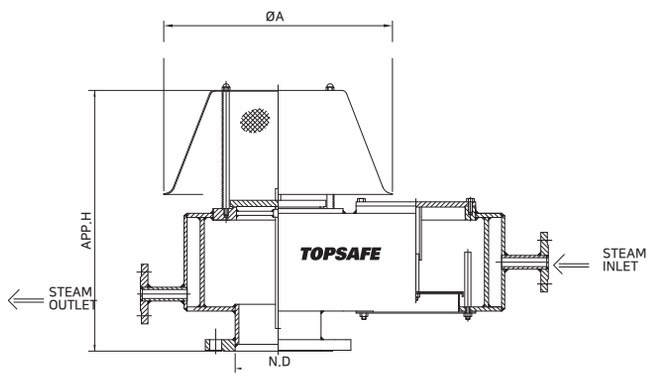

KSBBJ Weight Loaded Type

For high pressure setting, **KSJS** Type Spring Loaded Valve are available on request.

Dimension Table

Unit = mm

Size	2″	3″	4″	6″	8″	10″	12″
N.D	50	80	100	150	200	250	300
Ø A	252	330	350	440	500	580	620
APP. H	360	395	415	505	556	610	655

Notes : Standard Connection : ANSI 150LB FF flange, JIS or different sizes available on request.

Materials of Construction

ITEM NO.	COMPONENT	BODY	STEEL	304 S.S	316S.S
		TRIM	304 S.S	304 S.S	316S.S
1	BODY		STEEL	304 S.S	316 S.S
2	SEAT		304 S.S	304 S.S	316 S.S
3	GUIDE POST		304 S.S	304 S.S	316 S.S
4	SCREEN		304 S.S	304 S.S	304 S.S
5	COVER		STEEL	304 S.S	316 S.S
6	HOOD		304 S.S	304 S.S	304 S.S
7	BOLT/NUT		304 S.S	304 S.S	304 S.S
8	CAP NUT		304 S.S	304 S.S	316 S.S
9	PALLET ASSEMBLY		304 S.S	304 S.S	316 S.S
	PALLET WEIGHT		LEAD		
10	STEM		304 S.S	304 S.S	316 S.S

TOPSAFE CO., LTD.
ISO 9001 Registered
#100, Seobu-ro 1293beon-gil, Juchon-myeon, Gimhae-si, Gyeongsangnam-do 50877, Korea
Tel.+82-(0)55-338-9986 Fax.+82-(0)55-338-9987
E-mail: topsafe@topsafe.co.kr www.topsafe.co.kr
Service station • Agent / Distributor