DOOSAN

Optimal Solutions for the Future

PUMA SMX series



Super
Multi-tasking
Turning center

PUMA SMX series

PUMA SMX2600
PUMA SMX3100 / L
PUMA SMX2600S
PUMA SMX3100S / LS

ver. EN 160923 SU

Features

Basic Structure
Main Units
Machine
Performance

Technical Information

Standard/Option
Technical Diagram
Specification

Customer Support Service



PUMA SMX series

PUMA SMX series, Doosan's next generation Multi-tasking Turning Center, features high productivity, high precision and easy operation. By integrating the capabilities of multiple machines into one system, the PUMA SMX series provides best in class machining capability by using multi-tasking functions which minimize the machining time and the number of machining operations. The PUMA SMX series also provides excellent performance for high precision machining by minimizing thermal deformation and applying an accuracy control feature based on multiple thermal compensation functions. Ergonomic design considering operator convenience and efficient maintenance provides an optimal solution that meets the customer's needs.

Contents

02 Product Overview

Feature

04 Basic structure and cooling Concept
06 Main Units
10 Machine Performance

Technical Information

16 Options
18 Technical Diagram
22 Specification

26 Customer Support Service



Higher Productivity through Powerful Multi-tasking Functions

Decreases the total processing time and number of machining operations by using a single setup. This provides excellent high speed performance for component manufacturing processes which require accurate and complex machining.

- Complex machining capabilities of left spindle, right spindle, B-axis and milling spindle
- High-rigidity machine construction using structural analysis design
- Maximized Y-axis machining area through orthogonal design structure

Enhanced Precision through High Accuracy Control Functions

Maintains excellent precision during long-term machining processes by minimizing the thermal deformation of the spindle and the feed axis, and maximises precision through the 0.0001° axis resolution control function.

- Minimized thermal deformation of the spindle and feed axis using oil cooler
- Adoption of Roller LM Guideways with high-rigidity and high precision
- Equipped with 0.0001° B-axis and C-axis accuracy control function

Easy and Convenient Operation through an Ergonomic Design

Features excellent maintenance as well as usability and convenience through customized functions.

- Front located tool magazine
- Side-to-side movable swiveling operation panel with adjustable height
- Convenient ATC - MAGAZINE operation panel

Basic Structure

Highly Rigid Design.
All units are located on the main frame vertically for high rigidity.

Robust Design

FEM (Finite Element Method) analysis results in superior machine stability. All guideways are sealed with a protective covers, preventing high temperature chips and coolant from contacting the guideways, thus maintaining unsurpassed long-term accuracy.



Feed Axis

Extended axis travel distance and improved rapid traverse rate improve workpiece machining and provide excellent productivity. The X, Y and Z-axis move orthogonally to reflect high precision machine accuracy into machining accuracy.

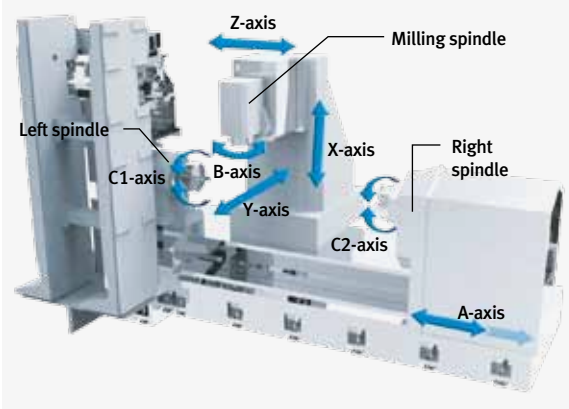

Travel

	PUMA SMX2600/S, 3100/S	PUMA SMX3100L/LS
X-axis	630 mm (24.8 inch)	
Y-axis	300 (±150) mm (11.8 (±5.9) inch)	
Z-axis	1585 mm (62.4 inch)	2585 mm (101.8 inch)
A-axis	1605 mm (63.2 inch)❶ 1562 mm (61.5 inch)❷	2500 mm (98.4 inch)❶❷
B-axis	240 (±120) deg	

❶ Right spindle ❷ Servo tail stock

High Precision Roller type LM Guideways

SP class roller type LM guideways for extra load capacity and rigidity are used on all axes to enable high rapid traverse rates.



Heavy-duty, high precision roller type LM guideways

Rapid traverse rate

	PUMA SMX2600/S, 3100/S	PUMA SMX3100L/LS
X-axis	48 m/min (1889.8 ipm)	
Y-axis	36 m/min (1417.3 ipm)	
Z-axis	48 m/min (1889.8 ipm)	30 m/min (1181.1 ipm)
A-axis	30 m/min (1181.1 ipm)❸	20 m/min (787.4 ipm)❸
B-axis	40 r/min	

❸ Right spindle (Servo tail stock is not applicable)

Basic Cooling Concept for Higher Accuracy in a Long time Machining

Structural preparation to minimize thermal error and ensure superior accuracy for a long time operation

Minimization of Thermal Deformation by Oil Cooling

Spindle and ball screw core cooling system minimizes thermal deformation during long machining processes and enhances high accuracy performance.

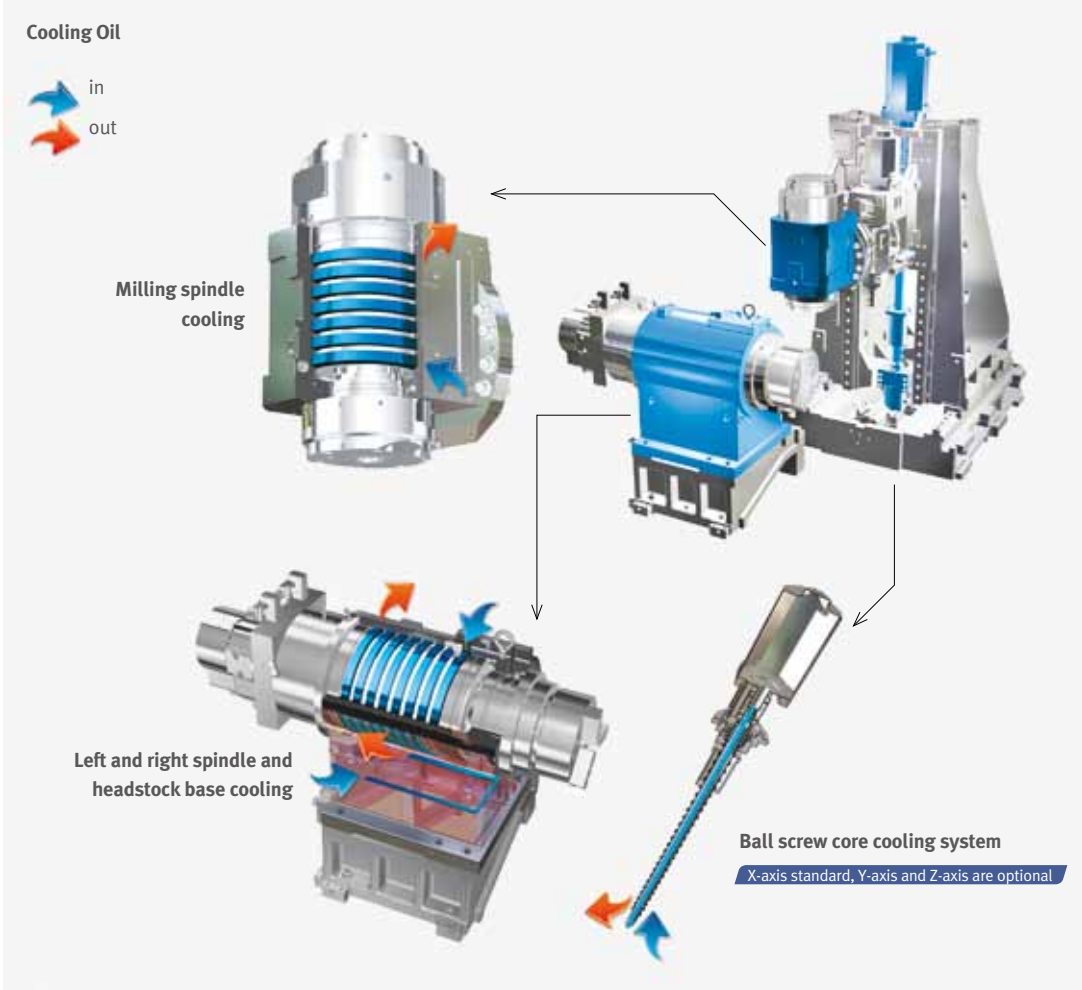

Cutting Accuracy

By performing extended test procedures of individual machine elements and detailed analysis of results, the SMX series achieves a high level of precision and reliability that fulfills customer satisfaction.

Turning (O.D. machining)

PUMA SMX2600

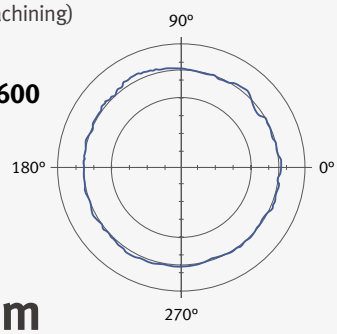

0.5 µm

Material	Aluminium
Tool	Diamond tool (Nose radius 0.5 min (0.02 in.))
Spindle speed	3000 r/min
Feedrate	0.5 mm/rev (0.02 ipr)

Milling (X-Y plane)

PUMA SMX2600

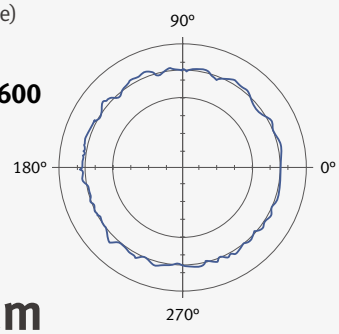

3.2 µm

Material	Aluminium
Tool	End mill Ø20 mm (0.787 in.)
Spindle speed	8000 r/min
Feedrate	2500 mm/min (98.4 ipm)

* This test is performed under Doosan Machine Tool's test environment.

Spindle

Perfect combination of 3 key spindles to ensure machining stability under various cutting conditions.

Perfect combination of key- rotation axis

Both left and right spindle are capable of high accuracy C-axis control and perform various machining functions like turning, milling and synchronized cutting using single set-up with milling spindle.









Model	Spindle	Standard Chuck (inch)	Spindle speed (r/min)	Power kW (Hp)	Torque N·m (lbf.ft)	Condition
PUMA SMX2600/S	Left Spindle	10	4000	26 / 22 (34.9 / 29.5)	700 (516.6)*	30min/cont.
PUMA SMX3100/S/L/LS		12	3000	30 / 25 (40.2 / 33.5)	1203 (887.8)	30min/cont.
PUMA SMX2600S	Right Spindle	10	4000	26 / 22 (34.9 / 29.5)	700 (516.6)*	30min/cont.
PUMA SMX3100S/LS						

* On S3 25% operation

Model	Spindle	Tool shank	Spindle speed (r/min)	Power kW (Hp)	Torque N·m (lbf.ft)	Condition
PUMA SMX2600/S	Milling Spindle	CAPTO C6	12000	26 / 18.5 / 15 (34.9 / 24.8 / 20.1)	124 (91.5)*	2.5min / 10min / cont.
PUMA SMX3100/S/L/LS						

* On S3 10% operation

High Precision Control of Spindle axes(C & B-axis)

Machining operation is mainly done by Left and Milling spindle. C-axis of left spindle and B-axis of milling spindle with Y-axis control realize multi-tasking turning center that can drill, tap and end mill in any angle and also deliver the ability to cut precise angles and sculpted contours(5-axis simultaneous controlled specification is option).

C-axis positioning control

To enhance C-axis positioning accuracy of left spindle, the position compensation sensor has been adopted. Left spindle can have C-axis positioning control of every 0.0001˚ in 360˚.

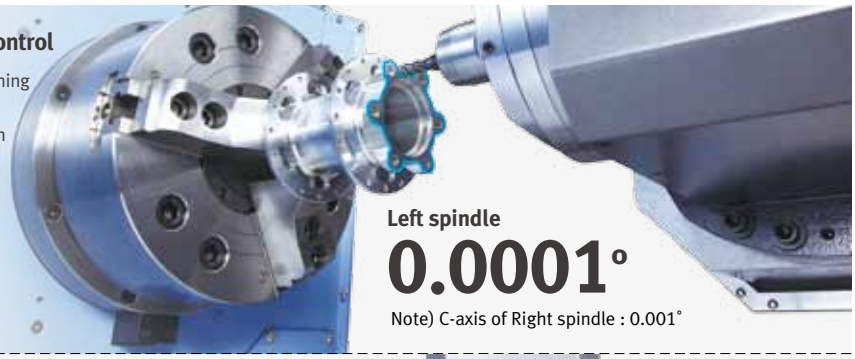

Left spindle

0.0001°

Note) C-axis of Right spindle : 0.001˚

B-axis positioning control

Precise continuous index

B-axis index that can have swivel positioning of every 0.0001˚ in ±120 ˚ performs not only horizontal front face machining but also angular machining.

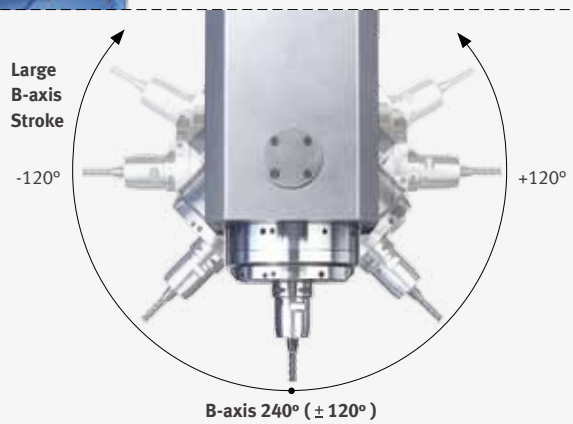

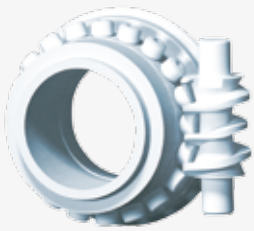

Swivel and index ing of B-axis is by servo motor and roller gear cam with high-rigidity and high-precision

Dual pressure braking

Depends on cutting condition, braking index of B-axis can be controlled.

Braking index at a random angle

Within its swivel ±120 ˚, B-axis can be indexed and braked precisely at a random angle.

Tailstock

More easier and faster set-up of the tailstock using M-code program by servo motor and ball screw

Servo driven tailstock

Servo tailstock make part set-up faster and easier. The operator inputs the proper M-code information in the control and tailstocks move to its proper positions automatically by linear motion control of servo motor and ball screw. No manual adjustments are required.

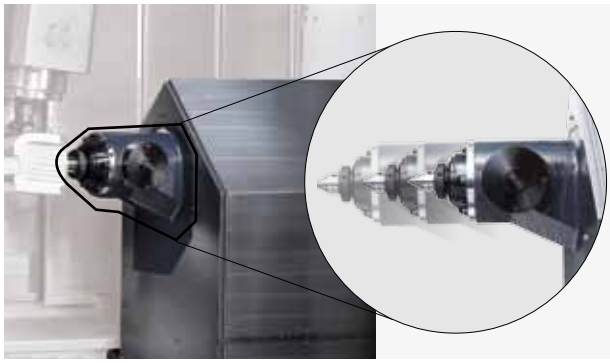

Model	Tail stock travel mm (inch)	Max. quill thrust force kN (lbs)	Tail stock center
PUMA SMX2600 / 3100	1562 (61.5)	10 (2248.0)	Built-in type Dead center, MT#5
PUMA SMX3100L	2500 (98.4)	15 (3374.4)	

Automatic Tool Changer

Servo ATC and Servo tool magazine ensuring fast and reliable tool indexing

Servo driven ATC & Tool magazine

The tool magazine can be increased up to 80 tools without any change of machine floor space. Tools are selected by a fixed address method that follows the shorter path.

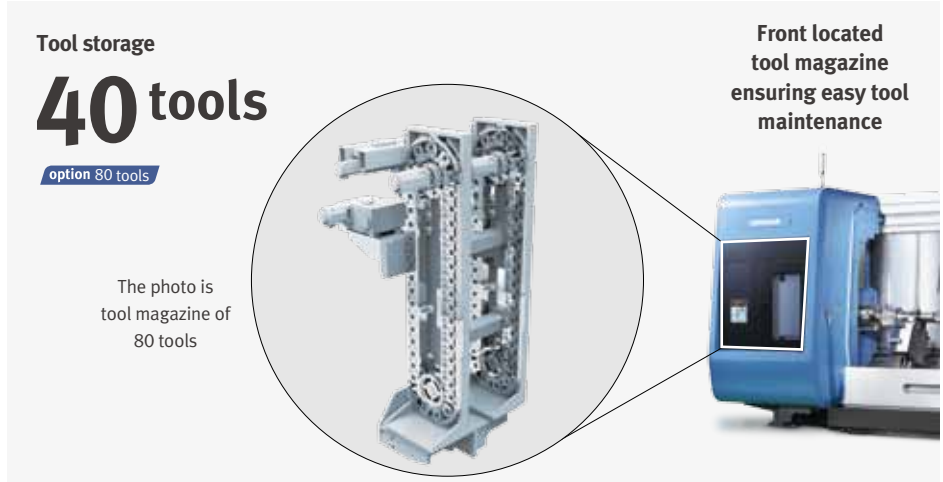

Max. tool length (from gauge line)	450 mm (17.7 inch)
Max. tool weight	12 kg (26.5 lb)
Max. tool diameter (continuous)	90 mm (3.5 inch)
Max. tool diameter (adjacent pots are empty)	130 mm (5.1inch)

ATC-MAGAZINE Operation Panel

The status of ATC and the tool magazine unit are identified visually by using a graphic touch panel display and touch operation. The touch screen also operates the ATC, the tool magazine and the tool feed pot carrier individually.



Display and touch operation

Displays ATC – MAGAZINE related information and supports manual operation by touchscreen. 7.5-inch large screen specification is available for the ATC – MAGAZINE operation panel.

Capable of photographing and recording

Includes black box function that photographs and stores the image as the ATC mechanism operates. An additional function can be added that records the ATC internal state using a surveillance camera and displays the operation on the screen.

Tool information display

Improves the tool management by saving and displaying useful tool related information.

Additional Tool Magazine

As option just for PUMA SMX3100L/LS, long boring bar magazine is available to ensure more easy application to long tube machining

Tools magazine for Long boring bar option for PUMA SMX3100L / LS

PUMA SMX3100L/LS can be equipped with long boring bar magazine as option.

Tool storage

3 tools ❶

PUMA SMX3100L/LS can accommodate workpieces as long as 2540mm between centers. The machine can process long tube such as landing gear axle requiring the center bore. Because the Automatic tool changer on this model cannot handle long boring bar, the separate tool magazine just for these tools can has 3 tool stations for tools as long as max. 600mm

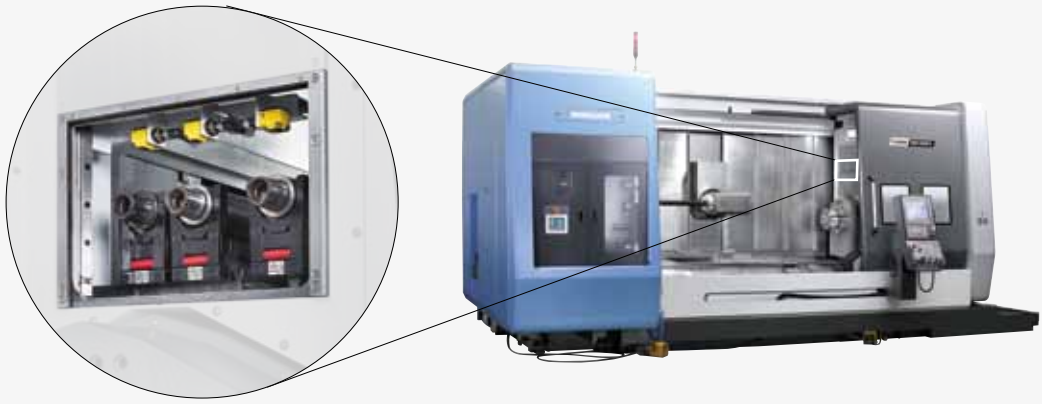

Max. Tool size

Ø 60 x L 600 mm

(Ø 2.4 x L 23.6 inch)

Max. Weight

15 kg

(33.1 lb)

or

Max. Tool size

Ø 30 x L 800 mm ❷

(Ø 1.2 x L 31.5 inch)

Max. Weight

15 kg

(33.1 lb)



Powerful Multi-tasking



Higher Efficiency

❶ You can select tools storage capacity 2+1 tools instead of 3 tools. The 2+1 tools storage means 2 tools of Ø60 x L600 mm or Ø30 x L800 mm and 1 large diameter tools, Ø190 x L200 mm can be mounted in long boring bar magazine.

❷ Ø30 x L800 mm sized tool is not Long boring bar but Gun drill. We do not recommend long boring bar sized Ø30 x L800 mm.

Machining Area

Expands machining capacity using an orthogonal structure and enables machining of large size workpieces through the extended turning diameter.

Maximized Y-axis Mmachining Area Using Orthogonal Structure Design

Maximized Y-axis machining area because of orthogonal structure design allows the machining of a wide range of workpieces.

Unit : mm (inch)

Y-axis machining area

300 mm
(11.8 inch)

X-axis :
630 mm (24.8 inch)

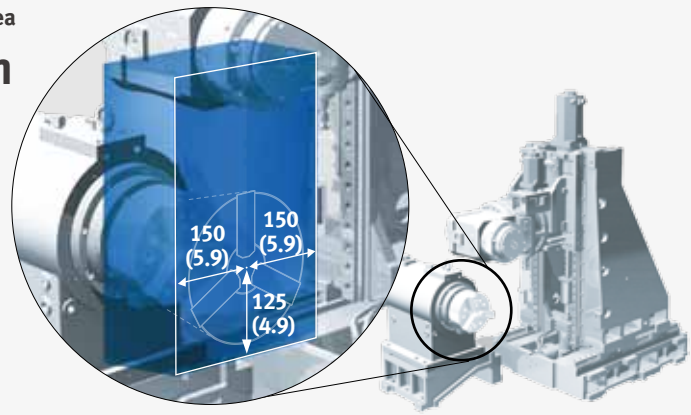

Y-axis : **300 mm (11.8 inch)**

Extended Machining Area

The extended machining area allows machining of large diameter and long workpieces.

Max. machining diameter

660 mm
(26.0 inch)

Max. machining length

1540 mm
(60.6 inch)

2540 mm*
(100 inch)

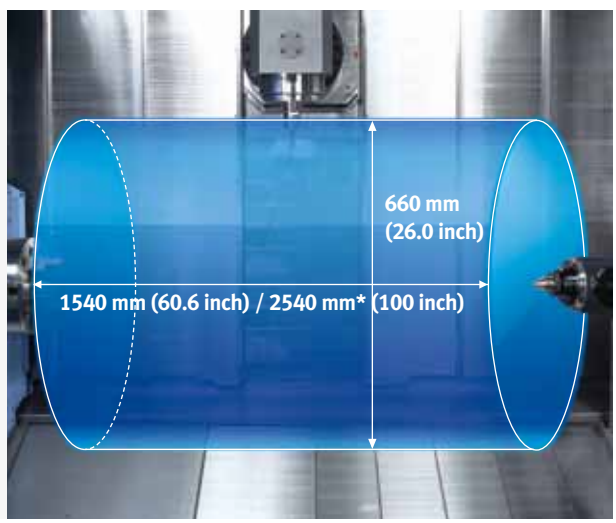

Large Bar Working Diameter

Both SMX2600 and 3100 models provide large bar diameter capacity through the spindle drawtube.

PUMA SMX2600

81 mm
(3.2 inch)

PUMA SMX3100

102 mm
(4.0 inch)

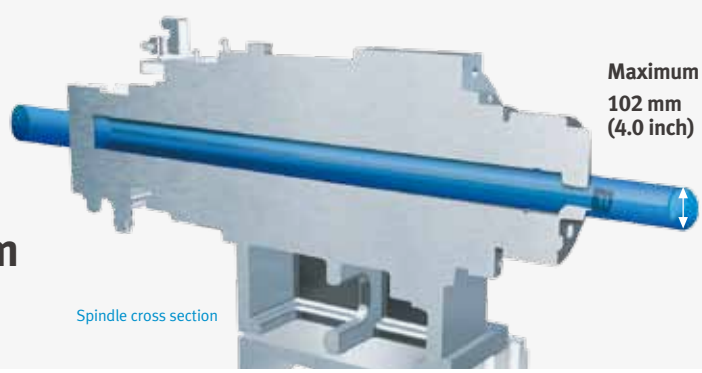

Spindle cross section

* PUMA SMX3100L/LS

Cutting Performance

Powerful machining capability in various operation such as turning, milling and drill and tapping and multi-tasking performance ensuring more higher machining efficiency.

Powerful Machining

O.D. cutting (PUMA SMX3100)

Spindle speed	Cutting speed	Feedrate	Radial cutting depth	Material removal rate
253 r/min	210 m/min (8267.7 ipm)	0.55 mm/rev (0.022 ipr)	8.5 mm (0.3 inch)	1405 cm^3/min (85.7 $inch^3$/min)



U-drill (milling)

Tool	Milling spindle speed	Feedrate	Material removal rate
Ø63 mm (2.5 inch)	1010 r/min	131 mm/min (5.2 ipm)	409 cm^3/min (25.0 $inch^3$/min)



Face milling

Tool	Milling spindle speed	Radial cutting depth	Feedrate	Material removal rate
Ø80 mm (3.1 inch)	1100 r/min	5 mm (0.2 inch)	1117 mm/min (44.0 ipm)	357 cm^3/min (21.8 $inch^3$/min)



End milling

Tool	Milling spindle speed	Radial cutting depth	Feedrate	Material removal rate
Ø25 mm (1.0 inch)	382 r/min	25 mm (1.0 inch)	200 mm/min (7.9 ipm)	125 cm^3/min (7.6 $inch^3$/min)



Tapping

Tool	Milling spindle speed	Feedrate
M30 x P3.5 mm	212 r/min	742 mm/min (29.2 ipm)



* The results, indicated in this catalogue are provides as example. They may not be obtained due to differences in cutting conditions and environmental conditions during measurement.

Higher Productivity by Multi-tasking performance

Faster machining time compared to many conventional machines provides superior productivity and machining capability.

Reduced production lead time by

75%



Conventional machining

Machine 1 (Turning Center)
- -Setting
- -Turning

-Remove and move workpiece

Machine 2 (Machining Center)
- -Setting
- -Conventional Milling
- -Change fixture for the angular surface machining
- -Milling for the angular surface

-Remove and move workpiece

Machine 3 (Turning Center)
- -Setting
- -Turning

650 Minutes

Multi-tasking of PUMA SMX

SMX2600S
- -Setting
- -Turning
- -Milling
- -Automatic feed
- -Turning
- -Milling

163 Minutes

Increased work efficiency using one time setup on one machine

Application Performance

Multitasking, which is performing more than one duty at once, This can lead to as much as a 40 percent increase in productivity and can positively impact your company's bottom line.

Benefits of Multi-tasking operation

Using a single set up, one machine is capable of performing all machining processes that generally require two three or even more machines. By minimizing time and labor, the process cost is reduced and lead times are shortened by up to 75%. This provides a significant advantage when manufacturing small batches of a variety of products.

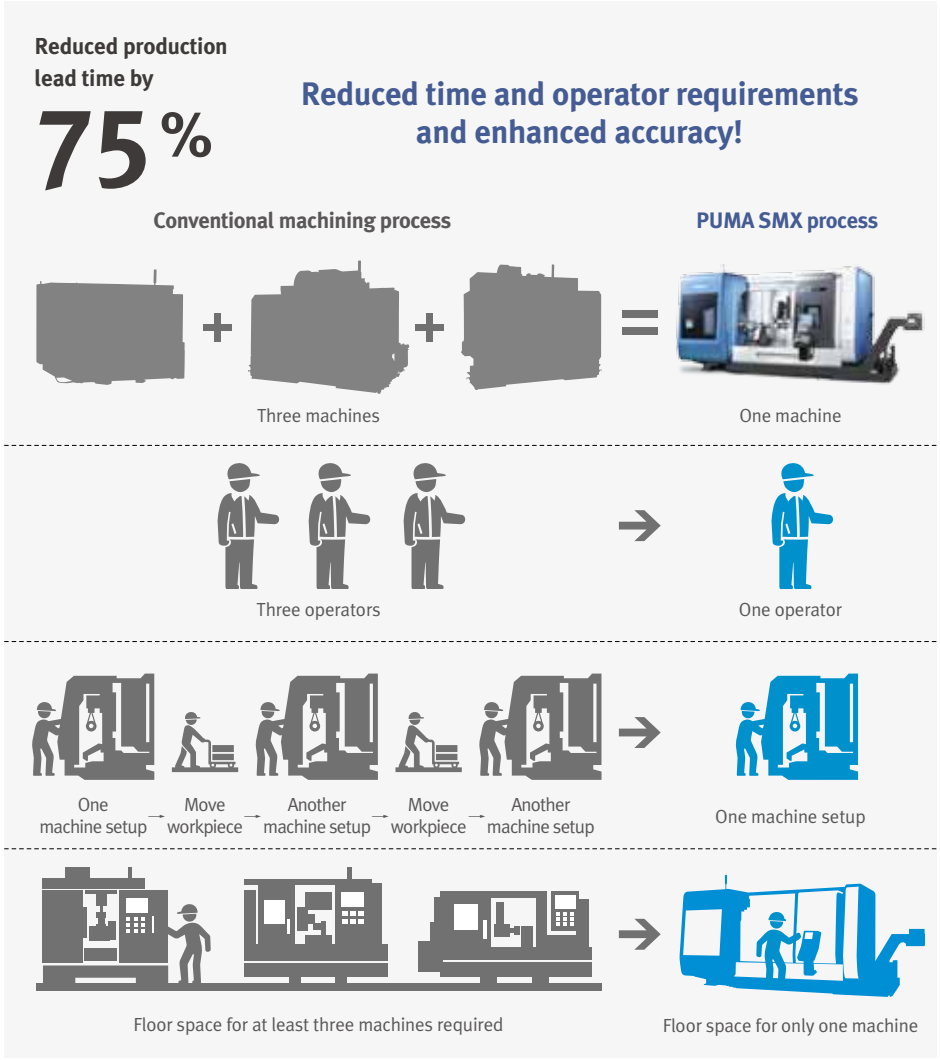

Providing 5-axis Complex Machining Capabilities (Standard when applying FANUC 31i-5)

Simultaneous 5-axis machining functions such as TCP* are built-in, thereby making the machining of complex shapes easier, such as an automotive engine impeller or an aero engine blade.

Tool Center Point Control

- Facilitating the high precision machining of the surface by automatic control of tool path
- Decreasing the time for the machining setup and the cutting process

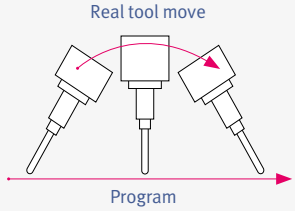

Cutting point command option

- Increasing the productivity by automatically compensating when using various tool tips without changing the machining program
- Performing effective tool correction

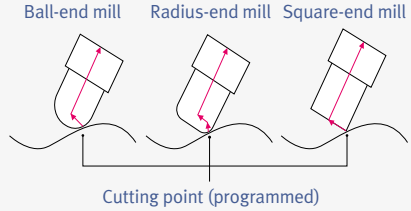

* TCP : Tool Center Point

Various Application

Just single machine, PUMA SMX series can meet all machining requirements. That's why, your investing in PUMA SMX series that boost your capabilities can take your operations to the highest level of performance, including your all-important return on investment.

Turning	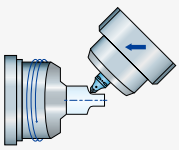	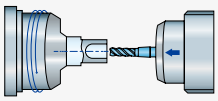	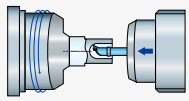	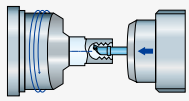
	O.D. cutting	U-Drilling	I.D. cutting	I.D. threading
Milling	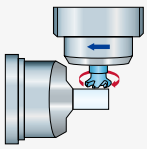	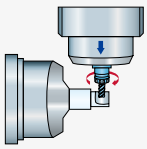	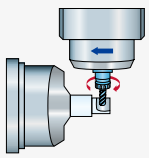	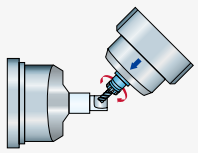
	O.D. milling	O.D. hole machining	Ball-end milling	Angular machining
Right spindle	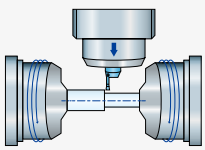	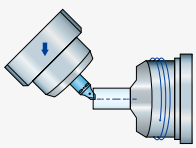	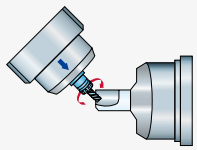	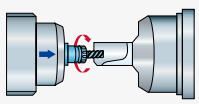
	Parting off	Face cutting	Angular machining	End face hole machining and tapping

Application Sample

Optimal Applications of High Productivity

A wide range of applications based on high productivity

Complex machining capabilities of the PUMA SMX series enable machining over a wide range of applications in various industries, such as aerospace, energy, shipbuilding, medical, etc.



Drill bits
Industry I Energy
Size I D165 X D175
Material I Stainless steel
Tools I 15



Shaft
Industry I General
Size I D150 X L350
Material I Aluminum
Tools I 14



Die roller
Industry I Medical
Size I D185 X L330
Material I Aluminum
Tools I 9



Valve
Industry I General
Size I D300 X L450
Material I Stainless steel
Tools I 6

Optimal Applications of Accuracy

Wide range of workpieces based on high precision

Stable control technology and excellent level of accuracy enables delicate and detailed workpiece machining.



Housing
Industry I General Machinery
Size I D150 X L300
Material I Aluminum
Tools I 19



Impeller
Industry I Aerospace
Size I D120 X L80
Material I Aluminum
Tools I 6

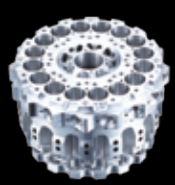

Barrel
Industry I Electronics
Size I D70 X L50
Material I Aluminum
Tools I 50



Bucket blade
Industry I Energy
Size I 85t x D120 x L600
Material I Stainless steel
Tools I 8

Ergonomic Design

Maximizes user's convenience by employing ergonomic design concept

Ease of Machine Setup through Ergonomic Design

By laying out the operation panel and tool magazine in a user-friendly way, tooling and workpiece setup become easier for the operator.



1.
Operation panel with side-to-side movement, swivel action and adjustable height

Swivel angel adjustment : 100°
Height adjustment : 190 mm (7.5 inch)
Longitudinal movable :
1350 mm (53.1 inch)



2.
Convenient ATC-MAGAZINE operation panel

Easy ATC and magazine condition check by using a touch screen



3.
Easy access for the operator to the spindle through the angled style exterior front cover

Minimum distance for operator reach to reduce fatigue



4.
Extended front window

Enables the operator to easily monitor the machining operation using the large front window



Award

An excellently designed PUMA SMX series has received the world's leading design awards, such as **the 2014 German Red Dot**, **the 2013 Australian AIDA** (Australian International Design Award), **the 2013 Korean Good Design**, etc. Thus, it is internationally recognized for its shape, function, quality, safety sustainability and innovation.

Safety Design to decrease Collision-caused Damage

Machine Airbag Function

Machine airbag function minimizes damage in the event of a machine collision, defect or heavy load by detecting sudden axis load increase.

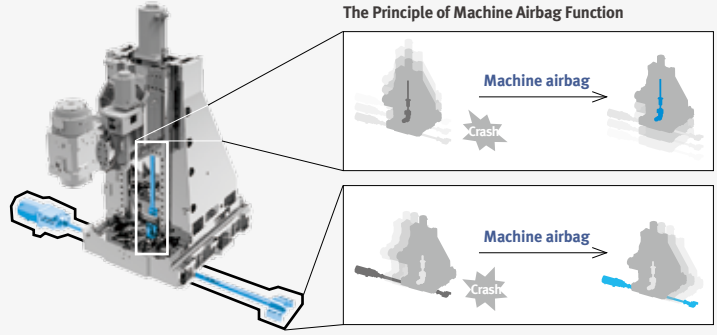

If a collision is detected by a sudden increase in torque during axis movement, the servo motor immediately moves in reverse to partially retract the cutter.

Easy Operation and Maintenance

Enhances ease of operation by the design based on the operator's functions and also provides maintenance functions that reduce downtime by decreasing the MTTR.*

User-friendly Operation Panel

The operator panel is designed to provide easy operation and also maintenance functions to reduce downtime. A large size 15-inch screen is applied as standard on the customized operator panel.



15-inch wide screen display unit



Optimized system design that reflects Doosan's know-how from long-term experience and the customer's needs

A design for easy operation	easy and convenient user interface, enhanced lamp visibility, optimized button size for easy operation and long life, use of a partition-type layout to prevent incorrect button operation
Addition of simple option buttons	additional function buttons can be easily fitted to spare sections of the operator panel
Customized function support	attachment of customized function switches and customized additional panel design

Simple Alarm Function

Doosan's EOP* system enables the user to operate the NC* system more conveniently.

Alarm Guide Function



- Alarm notification for user check-up



- Alarm notification of actuator and sensor status

Easy check-up of alarm status and troubleshooting problems by access to 3D displays of internal mechanisms

Periodic Maintenance Notification Function



- Avoids unexpected downtime
- Reduces maintenance cost
- Increases production efficiency
- Optimizes the performance

Manages and extends the lifespan of cutting tools

* EOP : Easy Operation Package / NC : Numerical Control

Tool Load Monitoring

It is possible to display various types of information about each tool and to monitor the tool load in real-time.



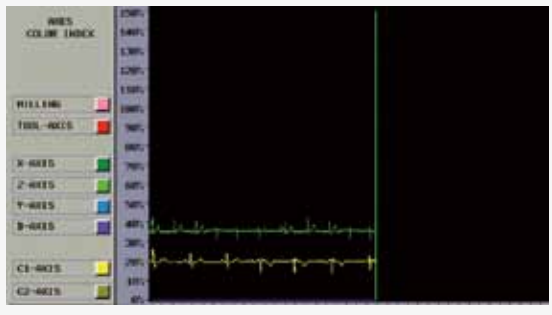

Standard/Optional Application

Various options to satisfy the customers requirements can be selected and applied.

● Standard ○ Optional X Not applicable

NO.	Division	Option		PUMA SMX 2600	PUMA SMX 3100	PUMA SMX 3100L	PUMA SMX 2600S	PUMA SMX 3100S	PUMA SMX 3100LS
1	Tool shank	CAPTO C6		●	●	●	●	●	●
2		HSK-A63		○	○	○	○	○	○
3	Automatic tool changer	3.5" operation touch panel		●	●	●	●	●	●
4		7.5" operation touch panel		○	○	○	○	○	○
5	Tool magazine	40 tools		●	●	●	●	●	●
6		80 tools		○	○	○	○	○	○
7	Long boring bar magazine	3 tools		X	X	○	X	X	○
8	Work holding device	Hydraulic chuck-1	Left spindle(10")	●	X	X	●	X	X
9			Left spindle(12")	○	●	●	○	●	●
10			Left spindle(15")	X	○	○	X	○	○
11		Hydraulic chuck-2	Right spindle(10")	X	X	X	●	●	●
12			Right spindle(12")	X	X	X	○	○	○
13		Dual pressure chucking		○	○	○	○	○	○
14		Chuck clamp confirmation		○	○	○	○	○	○
15		Chuck pressure check switch		○	○	○	○	○	○
16		Servo driven steady rest(SLU3.1~SLU5) -Steady rest parking function is impossible		○	○	○	○	○	○
17		Servo driven steady rest(SLU5.1 or K5.0 or K5.1) with steady rest parking function		X	X	○	X	X	○
18	Coolant	T-T-C (Through Tool coolant) Milling spindle)	Pressure 1.0MPa(145 psi)/ bag filter	●	●	●	●	●	●
19			Pressure 2.0MPa(290 psi)/ element-turbulance filter	○	○	○	○	○	○
20			Pressure 7.0MPa(1015 psi)/element-turbulance filter	○	○	○	○	○	○
21			Pressure 7.0MPa(1015 psi)/paper filter	○	○	○	○	○	○
22			MQL(Minimum quantity lubrication) system	○	○	○	○	○	○
23		Oil skimmer		○	○	○	○	○	○
24		Coolant pressure switch		○	○	○	○	○	○
25		Coolant level switch		○	○	○	○	○	○
26	Chip disposal	Chip conveyor(Right disposal)		○	○	○	○	○	○
27		Chip bucket		○	○	○	○	○	○
28		Air blower(for Left or Right spindle chuck)		○	○	○	○	○	○
29		Chuck coolant(for Left or Right spindle chuck)		○	○	○	○	○	○
30		Through spindle coolant(Left or Right)		○	○	○	○	○	○
31		Shower coolant(1.1kW, 165 liter/min)		○	○	○	○	○	○
32		Coolant gun		○	○	○	○	○	○
33		Air gun		○	○	○	○	○	○
34		Mist collector		○	○	○	○	○	○
35	High accuracy	Thermal compensation		●	●	●	●	●	●
36		Ball screw core cooling(X-axis)		●	●	●	●	●	●
37		Ball screw core cooling(Y/Z-axis)		○	○	○	○	○	○
38		Coolant chiller(temperature control)		○	○	○	○	○	○
39		Linear scale feed back(X-axis)		○	○	●	○	○	●
40		Linear scale feed back(Y/Z-axis)		○	○	○	○	○	○
41	Measurement	Auto tool setter		○	○	○	○	○	○
42		Auto workpiece measurement(RMP60)		○	○	○	○	○	○
43	Automation	Parts unloader and conveyor		X	X	X	○	○	X
44		Workpiece ejector		X	X	X	○	○	X
45		Bar feeder interface		○	○	○	○	○	○
46		Automatic front door(with safety device)		○	○	○	○	○	○
47	Others	Doosan tool monitoring system		●	●	●	●	●	●
48		Rotay type window wiper		○	○	○	○	○	○
49		Intelligent Kinematic Compensation for Multi-tasking(Software customized by Doosan)		●	●	●	●	●	●
50		Intelligent Kinematic Compensation for Multi-tasking(Essential Hardware)		○	○	○	○	○	○

Servo driven Steady rest option 16, 17

This equipment supports long workpieces during the machining process. Linear positioning of the steady rest is achieved by servo motor and ball screw and can be positioned during cycle.





Steady rest parking function*

When you don't want to use steady rest, you can make it parked under left chuck.

* This function is possible just for PUMA SMX3100L/LS with the steady rest selected one from among SLU5.1, K5.0 and K5.1.

Applicable model	Steady rest	Working range
PUMA SMX2600 / S **PUMA SMX3100/L/S/LS** (Steady rest parking function is impossible) ❶	SLU-3.1	Ø20~Ø165 mm (0.8~6.5 inch)
	SLU-3.2	Ø50~Ø200 mm (2.0~7.9 inch)
	SLU-4	Ø35~Ø245 mm (1.4~9.6 inch)
	SLU-5	Ø50~Ø310 mm (2.0~12.2 inch)
PUMA SMX3100L / LS (Steady rest parking function is impossible) ❷	SLU-5.1	Ø85~Ø350 mm (3.3~13.8 inch)
	K 5.0	Ø80~Ø390 mm (3.1~15.4 inch)
	K 5.1	Ø100~Ø410 mm (3.9~16.1 inch)

❶ In PUMA SMX2600/S, 3100/S, the steady rest parking function is not possible. And also, the function is not possible when the steady rest is selected from among SLU-3.1 to SLU-5 for PUMA SMX3100L/LS.

❷ Using 15-inch chuck in PUMA SMX3100L/LS instead of standard 12-inch, if you select Servo driven Steady rest for PUMA SMX3100L/LS, the steady rest must be K5.1 to make it use of steady rest parking function.

Oil Skimmer option 23

An oil skimmer with high quality oil-water separating performance maximizes cutting oil's lifespan.



Chip Conveyor (Right side exit) option 26

The conveyor provides a superior chip removal system and is designed with a stable structure for easy maintenance and reduced leakage. By selecting the correct type of conveyor, the efficiency of the machine working area is increased.

Name	Hinge Belt	Magnetic Scraper	Drum filter Single	Drum filter Double
Application	For steel	For castings	For castings	For steel, castings, nonferrous metal
Features	- Standard - Appropriate for a heavy material chip of more than 30 mm in length	- Easy maintenance - Eject the chip by scraping and raising the chip with the scraper	- Appropriate for the sludge - Not proper for non-ferrous metal	- Appropriate for both a long and a short chip - Filtering coolant
Shape	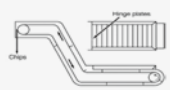	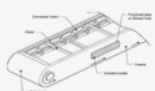	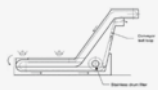	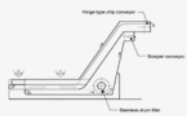

Tool Setter (Automatic) option 41

Auto linear motion type tool setter has been installed for tool measurement and tool wear detection. It is stored in a safe location during the machining process, and can be activated with the workpiece still in place in the chuck with no interference.



Coolant Chiller (Recommendation) option 38

A coolant chiller minimizes the thermal deformation by controlling the temperature of the return coolant to the machine, thus improving the accuracy.

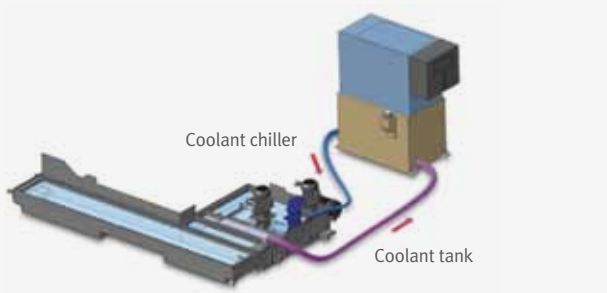

Optional Equipment for Automation option 43, 44, 45

Various peripheral equipment is available to support the SMX to improve its performance and productivity.

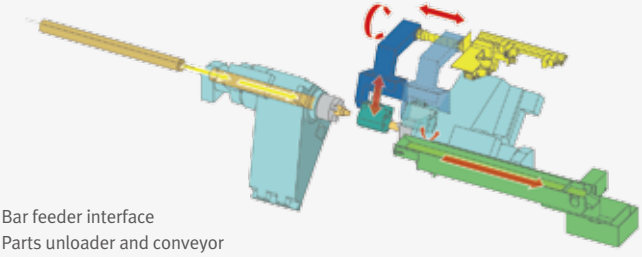

- Bar feeder interface
- Parts unloader and conveyor
- Workpiece ejector

Spindle Power – Torque Diagram

PUMA SMX series

Both turning and milling spindles have powerful heavy-duty built-in type motors to maximize productivity.

PUMA SMX2600 Left spindle

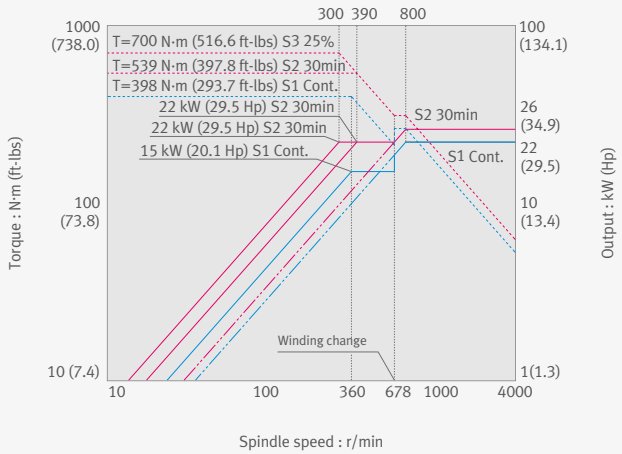

PUMA SMX3100 Left spindle

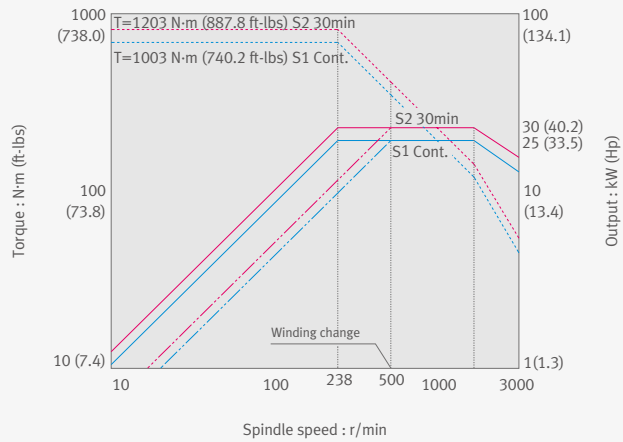

PUMA SMX2600/3100 Right spindle

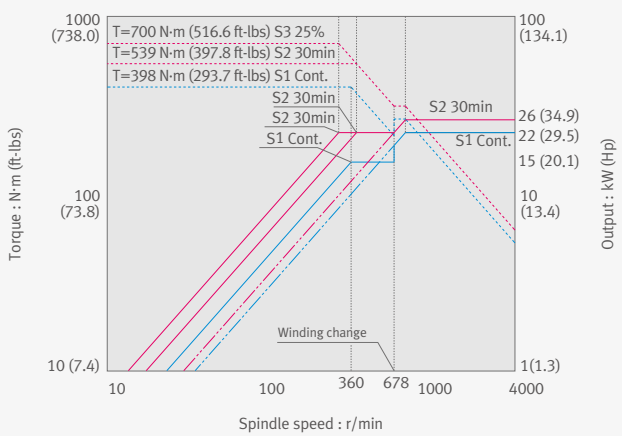

PUMA SMX2600/3100 Milling spindle

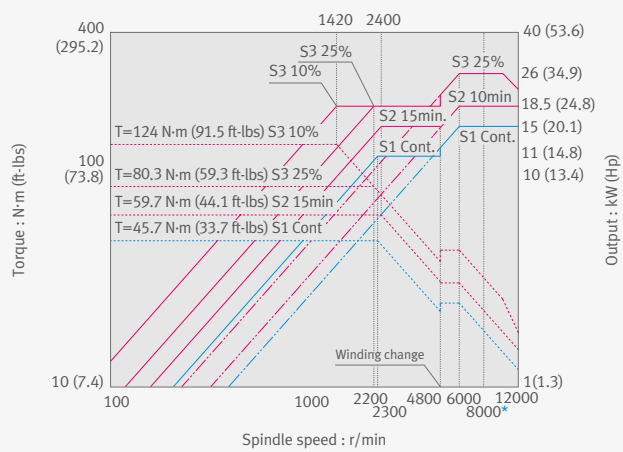

* 8000 r/min of Milling spindle is available as option

External Dimensions

PUMA SMX2600/S, 3100/L/S/LS (40/80 Tools)

Unit: mm (inch)

Top view

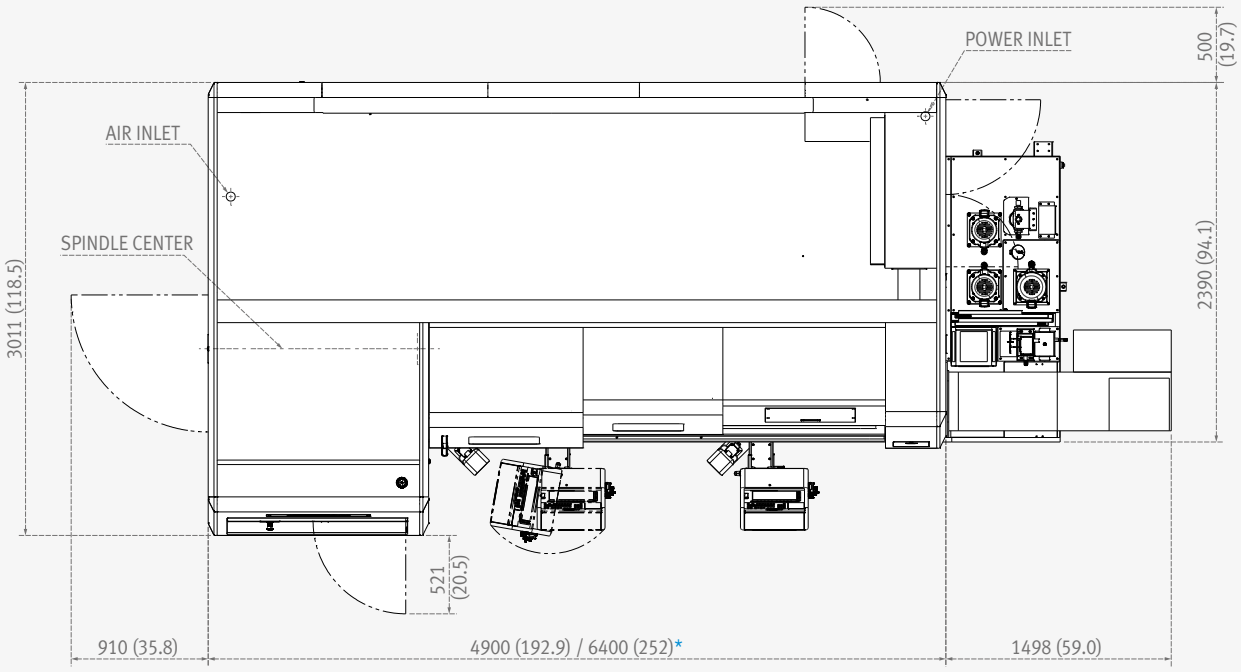

* PUMA SMX3100L / LS

Front view

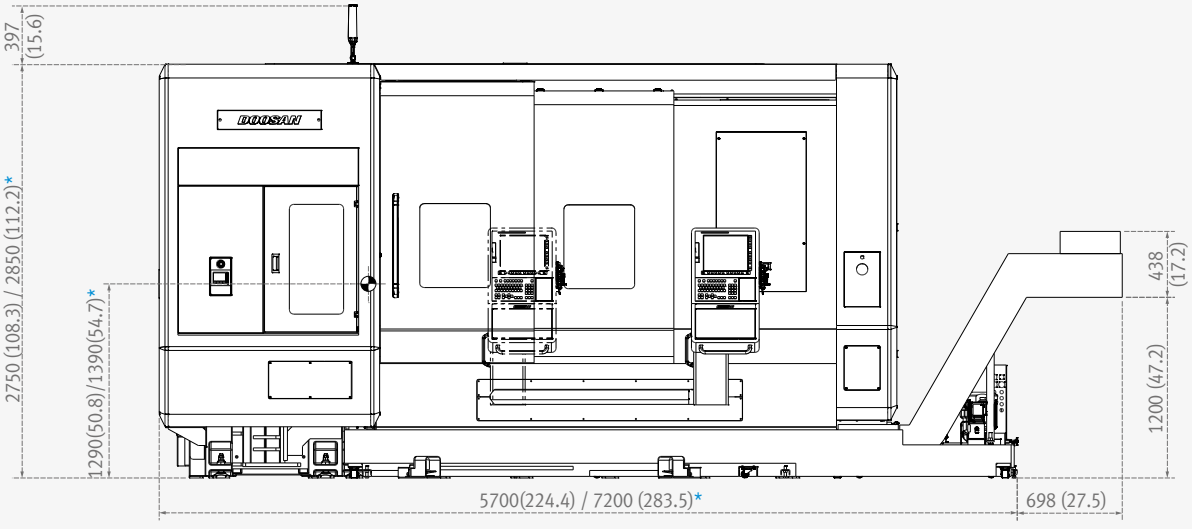

* PUMA SMX3100L / LS

Machine foundation : Anchoring is recommended to maintain accuracy over a long period of time. The anchor bolts and other related parts for foundation work are supplied as standard items. Please consult with Doosan and sales technicians regarding ground and operating conditions.

Working Range

PUMA SMX2600/SMX3100 series

Entire range

Unit : mm (inch)

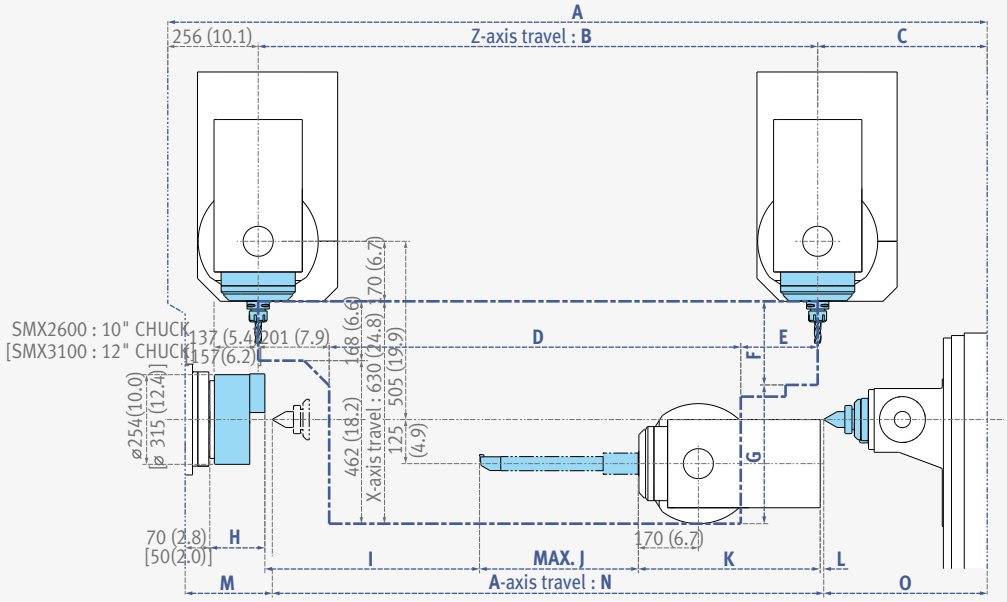

Model	A	B	C	D	E	F	G	H	I	J	K	L	M	N	O
PUMA SMX2600	2321 (91.4)	1585 (62.4)	480 (18.9)	1166 (45.9)	218 (8.6)	237 (9.3)	393 (15.5)	156 (6.1)	608 (23.9)	450 (17.7)	515 (20.3)	10 (0.4)	247 (9.7)	1562 (61.5)	463 (18.2)
PUMA SMX3100								176 (6.93)							
PUMA SMX3100L	3223 (126.9)	2585 (101.8)	382 (15)	2168 (85.4)	216 (8.5)	195 (7.7)	435 (17.1)	176 (6.93)	1610 (63.4)*	450 (17.7)*	515 (20.3)	12 (0.5)	313 (12.3)	2500 (98.4)	361 (14.2)

* "I" and "J" can be different depends on an applied long boring bar

Y-axis working rage

Unit : mm (inch)

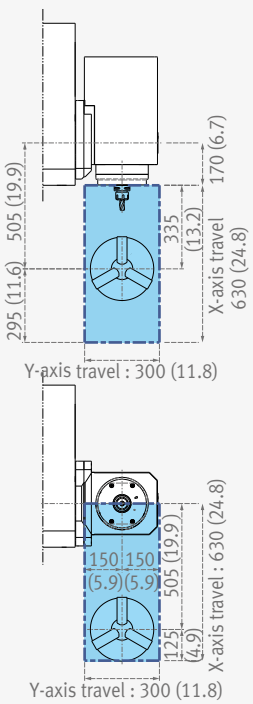

B-axis rotating range

Unit : mm (inch)

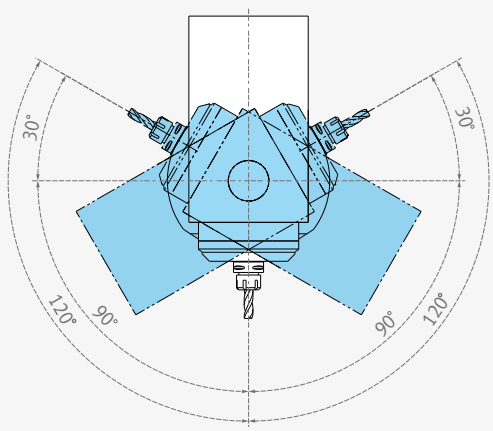

PUMA SMX2600S/SMX3100S series

Entire range

Unit : mm (inch)

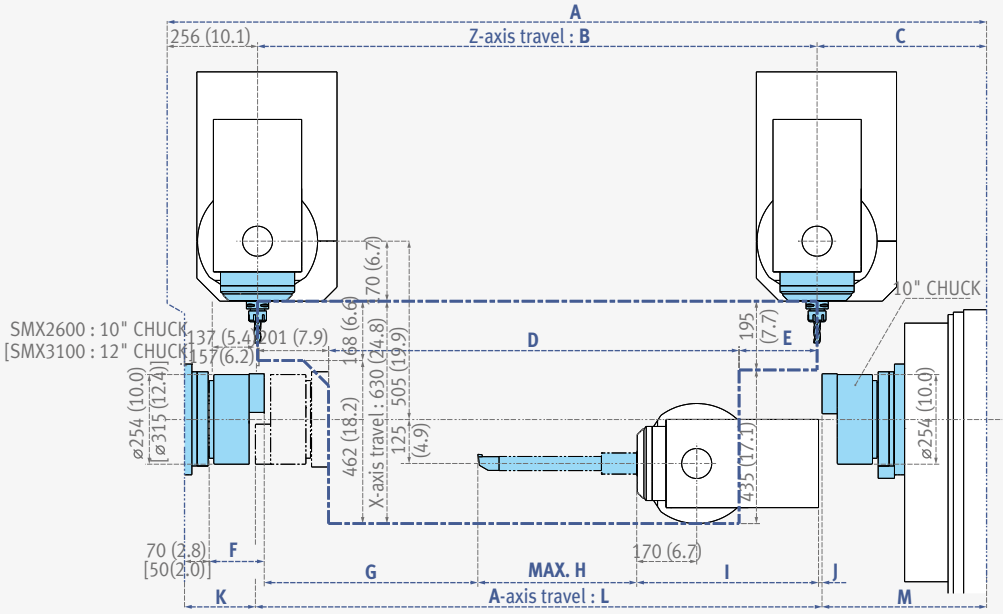

Model	A	B	C	D	E	F	G	H	I	J	K	L	M
PUMA SMX2600S	2321 (91.4)	1585 (62.4)	480 (18.9)	1163 (45.8)	221 (8.7)	156 (6.1)	605 (23.8)	450 (17.7)	515 (20.3)	10 (0.4)	201 (7.9)	1605 (63.2)	466 (18.3)
PUMA SMX3100S						176 (6.93)							
PUMA SMX3100LS	3223 (126.9)	2585 (101.8)	382 (15)	2168 (85.4)	216 (8.5)	176 (6.93)	1610 (63.4)*	450 (17.7)*	515 (20.3)	10 (0.4)	311 (12.2)	2500 (98.4)	363 (14.3)

* "G" and "H" can be different depends on an applied long boring bar

Y-axis working rage

Unit : mm (inch)

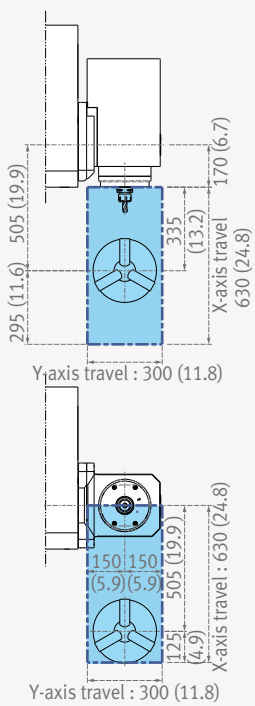

B-axis rotating range

Unit : mm (inch)

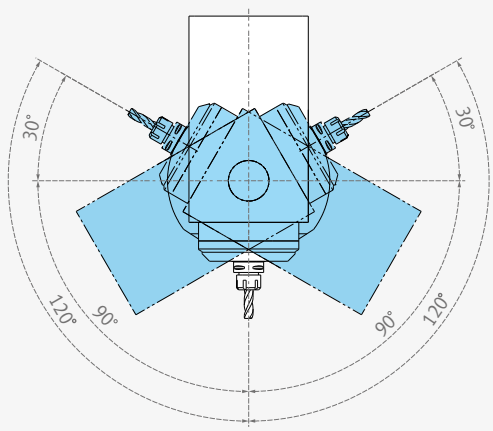

Machine Specifications



Standard Features

- Tool and tool box
- Through spindle coolant for milling spindle
- Door interlock
- Level bolt and plate
- Servo tail stock (Except PUMA SMX2600S/3100S)
- Soft jaws
- Spindle head cooling system
- Hydraulic unit
- Automatic coolant system
- Work lamp
- Standard hydraulic chuck
- X-axis linear scale (only PUMA SMX3100L/LS)

Item			Unit	PUMA SMX2600
Capacity	Swing over bed		mm (inch)	
	Recom. turning diameter		mm (inch)	255 (10.0)
	Max. turning diameter		mm (inch)	
	Max. turning length		mm (inch)	1540 (60.6)
	Chuck size	Left spindle	inch	10 {12}*
		Right spindle	inch	
	Chuck work weight(include chuck)		kg (lb)	260 (573.2)
	Shaft work weight(include chuck)		kg (lb)	520 (1146.4)
	Bar working diameter		mm (inch)	81 (3.2)
Travels	Travel distance	X-axis	mm (inch)	
		Y-axis	mm (inch)	
		Z-axis	mm (inch)	1585 (62.4)
		A-axis**	mm (inch)	1562 (61.5)
		B-axis	deg	
		C1-axis	deg	
		C2-axis	deg	-
	Rapid traverse rate	X-axis	m/min (ipm)	
		Y-axis	m/min (ipm)	
		Z-axis	m/min (ipm)	48 (1889.8)
		A-axis**	m/min	-
		B-axis	r/min	
		C1-axis	r/min	
		C2-axis	r/min	
Left spindle	Max. spindle speed		r/min	4000
	Spindle nose		ASA	A2-8
	Spindle bearing diameter (Front)		mm (inch)	130 (5.1)
	Spindle through hole		mm (inch)	91 (3.6)
	Min. spindle indexing angle (C axis)		deg	
Right spindle	Max. spindle speed		r/min	
	Spindle nose		ASA	
	Spindle bearing diameter (Front)		mm (inch)	
	Spindle through hole		mm (inch)	
	Min. spindle indexing angle (C axis)		deg	
Milling spindle	Max. spindle speed		r/min	
	Min. spindle indexing angle (B axis)		deg	
Automoatic Tool Changer	Tool storage capa. (Max.)		ea	
	Tool shank		-	
	Max. tool diameter continous		mm (inch)	
	Max. tool diameter without adjacent tools		mm (inch)	
	Max. tool length		mm (inch)	
	Max. tool weight		kg (lb)	
	Tool change time (T-T-T)	Tool-to-tool	sec	
		Chip-to-chip	sec	7.8
Long Boring Bar Magazine (option for SMX 3100L/LS)	Tool storage capacity(Max.)		ea.	-
	Max. tool size		mm (inch)	-
	Max. tool weight		kg (lb)	-
Tail Stock	Quill bore taper		MT	#5
	Quill travel		mm (inch)	1562 (61.5)
Motors	Left spindle motor power (30min/Cont.)		kW (Hp)	26 / 22 (34.9 / 29.5)
	Right spindle motor power (30min/Cont.)		kW (Hp)	
	Milling spindle motor power (2.5min/10min/Cont.)		kW (Hp)	
	Coolant pump motor power		kW (Hp)	
Power source	Electric power supply (rated capacity)		kVA	64.61
Machine Dimensions	Height		mm (inch)	2750 (108.3)
	Length		mm (inch)	4900 (192.9)
	Width		mm (inch)	
	Weight		kg (lb)	15800 (34833)
Control	NC system		-	

PUMA SMX3100	PUMA SMX3100L	PUMA SMX2600S	PUMA SMX3100S	PUMA SMX3100LS
660 (26.0)				
315 (12.0)		255 (10.0)	315 (12.0)	
660 (26.0)				
1540 (60.6)	2540 (100)	1540 (60.6)		2540 (100)
12 {15}*		10 {12}*	12 {15}*	
-		10 {12}*		
500 (1102.3)		260 (573.2)	500 (1102.3)	
1000 (2204.6)		520 (1146.4)	1000 (2204.6)	
102 (4.0)		81 (3.2)	102 (4.0)	
630 (24.8)				
300 (±150) (11.8 (±5.9))				
1585 (62.4)	2585 (101.8)	1585 (62.4)		2585 (101.8)
1562 (61.5)	2500 (98.4)	1605 (63.2)		2500 (98.4)
240 (±120)				
360				
-		360		
48 (1889.8)				
36 (1417.3)				
48 (1889.8)	30 (1181.1)	48 (1889.8)		30 (1181.1)
-		30 (1181.1)		20 (787.4)
40				
200				
-		200		
3000		4000	3000	
A2-11		A2-8	A2-11	
160 (6.3)		130 (5.1)	160 (6.3)	
115 (4.5)		91 (3.6)	115 (4.5)	
0.0001				
-		4000		
-		A2-8		
-		130 (5.1)		
-		91 (3.6)		
-		0.001		
12000 {8000}*				
0.0001				
40 {80}*				
CAPTO C6 {HSK-A63}*				
90 (3.5)				
130 (5.1)				
450 (17.7)				
12 (26.5)				
1.8				
7.8	11.5	7.8		11.5
-	{3}*	-		{3}*
-	{Ø60 x L600 or Ø30 x L800 (Ø2.4 x L23.6 or Ø1.2 x L31.5)}*	-		{Ø60 x L600 or Ø30 x L800 (Ø2.4 x L23.6 or Ø1.2 x L31.5)}*
-	{15 (33.1)}*	-		{15 (33.1)}*
#5		-		
1562 (61.5)	2500 (98.4)	-		
30 / 25 (40.2 / 33.5)		26 / 22 (34.9 / 29.5)	30 / 25 (40.2 / 33.5)	
-		26 / 22 (34.9/29.5)		
26 / 18.5 / 15 (34.9 / 24.8 / 20.1)				
2.2 (3.0)				
67.61	74.25	89.91	94.71	99.44
2750 (108.3)	2850 (112.2)	2750 (108.3)	2850 (112.2)	
4900 (192.9)	6400 (252)	4900 (192.9)		6400 (252)
3011(118.5)				
16300 (35935)	20100 (44313)	16200 (35715)	16700 (36817)	20500 (45195)
FANUC 31i {FANUC 31I-5}*				

* { } : Option ** A-axis is travel of servo tail stock in PUMA SXM2600, 3100/L and travel of right spindle in PUMA SMX2600S, 3100S/LS.

NC Unit Specification

FANUC 31i/31i-5

● Standard ○ Optional X N/A

No.	Item		Spec.	PUMA SMX2600, 3100/L	PUMA SMX2600S, 3100S/LS	PUMA SMX2600, 3100/L	PUMA SMX2600S, 3100S/LS
				Fanuc 31i		Fanuc 31i-5	
1	Controlled axis	Controlled axes		7(X1, Z1, C1, Y, B, A, {Z2})	8(X1, Z1, C1, Y, B, C2, A, {Z2})	7(X1, Z1, C1, Y, B, A, {Z2})	8(X1, Z1, C1, Y, B, C2, A, {Z2})
2		Simultaneously controlled axes		4 axes	4 axes	5 axes	5 axes
3		Synchronous/Composite control	C1 & C2 Synchro Control	X	●	X	●
4		HRV2 control		●	●	●	●
5		Inch/metric conversion		●	●	●	●
6		Stored stroke check 1		●	●	●	●
7		Interference check for rotary area		●	●	●	●
8		Unexpected disturbance torque detection function		●	●	●	●
9	Operation	DNC operation with memory card		●	●	●	●
10		Tool retract and recover		○	○	○	○
11		Dry run		●	●	●	●
12		Single block		●	●	●	●
13		Handle interruption		○	○	○	○
14		Incremental feed	x1,x10,x100	●	●	●	●
15		Manual handle retrace		○	○	○	○
16		Active block cancel		○	○	○	○
17	Interpolation functions	Nano interpolation		●	●	●	●
18		Linear interpolation		●	●	●	●
19		Circular interpolation		●	●	●	●
20		Polar coordinate interpolation		●	●	●	●
21		Cylindrical interpolation		●	●	●	●
22		Helical interpolation		●	●	●	●
23		Thread cutting, synchronous cutting		●	●	●	●
24		Multi threading		●	●	●	●
25		Thread cutting retract		●	●	●	●
26		Continuous threading		●	●	●	●
27		Variable lead thread cutting		○	○	○	○
28		Circular thread cutting		○	○	○	○
29		Polygon machining with two spindles		●	●	●	●
30		High-speed skip	Input signal is 8 points.	○	○	○	○
31		3rd/4th reference position return		●	●	●	●
32		Balanced cutting	Only for more than 2 path control	X	X	X	X
33	Feed function	Override cancel		●	●	●	●
34		AI contour control I (30blocks)		●	●	-	-
35		AI contour control II (200blocks)		○	○	●	●
36		High-speed processing (600blocks)		○	○	●	●
37		Rapid traverse block overlap		●	●	●	●
38	Program input	Optional block skip		●	●	●	●
39		Absolute/incremental programming	Combined use in the same block	●	●	●	●
40		Diameter/Radius programming		●	●	●	●
41		Dynamic switching of diameter/radius specification		○	○	●	●
42		Automatic coordinate system setting		●	●	●	●
43		Workpiece coordinate system	G52 - G59	●	●	●	●
44		Workpiece coordinate system preset		○	○	○	○

● Standard ○ Optional X N/A

No.	Item		Spec.	PUMA SMX2600, 3100/L	PUMA SMX2600S, 3100S/LS	PUMA SMX2600, 3100/L	PUMA SMX2600S, 3100S/LS
				Fanuc 31i		Fanuc 31i-5	
45	Program input	Addition of workpiece coordinate system	48 pairs	○	○	○	○
46		Addition of workpiece coordinate system	300 pairs	○	○	○	○
47		Direct drawing dimension programming		●	●	●	●
48		G code system	A	●	●	●	●
49		G code system	B/C	●	●	●	●
50		Chamfering/Corner R		●	●	●	●
51		Custom macro		●	●	●	●
52		Addition of custom macro common variables	#100 - #199, #500 - #999	●	●	●	●
53		Interruption type custom macro		○	○	○	○
54		Canned cycle		●	●	●	●
55		Multiple repetitive cycles	G70~G76	●	●	●	●
56		Multiple repetitive cycles II	Pocket profile	●	●	●	●
57		Canned cycle for drilling		●	●	●	●
58		Automatic corner override		○	○	○	○
59		3-dimensional coordinate system conversion		●	●	●	●
60		Coordinate system shift		●	●	●	●
61		Direct input of coordinate system shift		●	●	●	●
62		Real time custom macro		X	X	X	X
63		Pattern data input		○	○	○	○
64	Operation Guidance Function	EZ Guidei(Conversational Programming Solution)		●	●	●	●
65		EZ Operation package		●	●	●	●
66	Auxiliary/Spindle speed function	Constant surface speed control		●	●	●	●
67		Spindle override	0 - 150%	●	●	●	●
68		Spindle orientation		●	●	●	●
69		Spindle synchronous control		X	●	X	●
70		Rigid tap		●	●	●	●
71		Arbitrary speed threading		○	○	○	○
72	Tool function/Tool compensation	Tool offset pairs	400-pairs	●	●	●	●
73			499-pairs	○	○	○	○
74			999-pairs	○	○	○	○
75		Tool offset		●	●	●	●
76		Tool center point control		X	X	●	●
77		Smooth TCP		X	X	○	○
78		Y-axis offset		●	●	●	●
79		Tool radius/Tool nose radius compensation		●	●	●	●
80		Tool geometry/wear compensation		●	●	●	●
81		Automatic tool offset	G36/G37	●	●	●	●
82		Direct input of offset value measured B		●	●	●	●
83		Tool life management		●	●	●	●
84	Accuracy compensation function	Backlash compensation for each rapid traverse and cutting feed		●	●	●	●
85		Stored pitch error compensation		●	●	●	●
86	Editing operation	Part program storage size & Number of registerable programs	1280M(512KB)_1000 programs	●	●	●	●
87			2560M(1MB)_1000 programs	○	○	○	○
88			5120M(2MB)_1000 programs	○	○	○	○
89			10240M(4MB)_1000 programs	○	○	○	○
90			20480M(8MB)_1000 programs	○	○	○	○
91			2560M(1MB)_2000 programs	○	○	○	○
92			5120M(2MB)_4000 programs	○	○	○	○
93			10240M(4MB)_4000 programs	○	○	○	○
94			20480M(8MB)_4000 programs	○	○	○	○
95		Program protect		●	●	●	●
96		Password function		●	●	●	●
97		Playback		○	○	○	○
98		Memory card program edit & operation	Max 63 programs	●	●	●	●
99	Data input/output	Fast data server		○	○	○	○
100		External data input		●	●	●	●
101		Memory card input/output		●	●	●	●
102		USB memory input/output		●	●	●	●
103		Automatic data backup		●	●	●	●
104	Interface function	Embedded Ethernet		●	●	●	●
105		Fast Ethernet		○	○	○	○
106	Others	Display unit	15" color LCD	●	●	●	●
107	Robot interface	Robot interface with PMC I/O module		○	○	○	○
108		Robot interface with PROFIBUS-DP		○	○	○	○

Responding to Customers Anytime, Anywhere

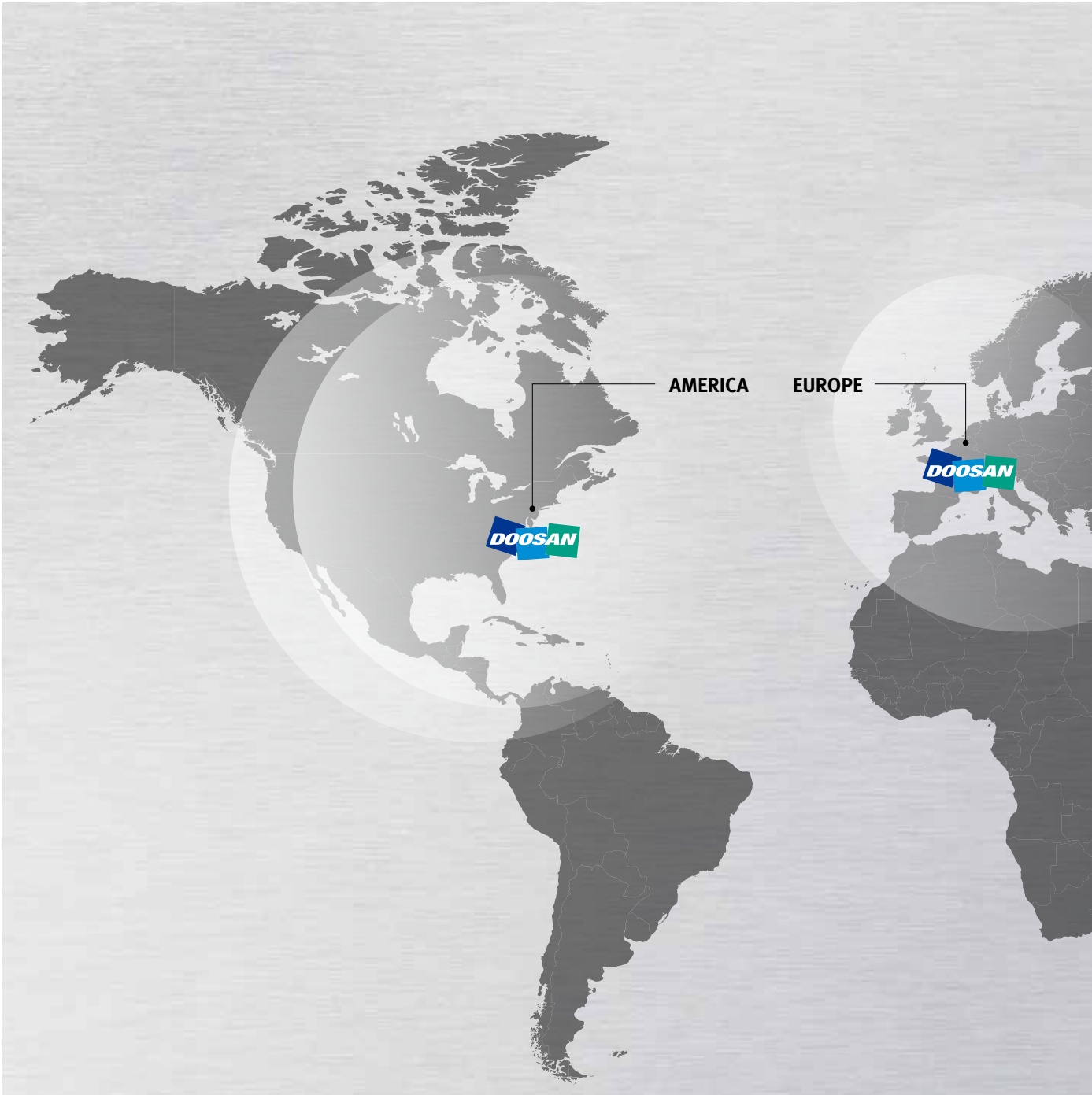

Global Service Support Network

Corporations	Dealer Networks	Technical Centers	Factories
5	122	18	3

Technical Center: Sales Support, Service Support, Parts Support

Doosan Machine Tools' Global Network, Responding to Customer's Needs nearby, Anytime, Anywhere

Doosan machine tools provides a system-based professional support service before and after the machine tool sale by responding quickly and efficiently to customers' demands. By supplying spare parts, product training, field service and technical support, we can provide top class support to our customers around the world.



Domestic Service Support Network

Integrated Support Centers	Sales Branch Offices	Post-Sales Service Centers	Designated Repair Service Centers
2	7	6	31

Customer Support Service

We help customers to achieve success by providing a variety of professional services from pre-sales consultancy to post-sales support.

Supplying Parts

- Supplying a wide range of original Doosan spare parts
- Parts repair service

Field Services

- On site service
- Machine installation and testing
- Scheduled preventive maintenance
- Machine repair

Technical Support

- Supports machining methods and technology
- Responds to technical queries
- Provides technical consultancy

Training

- Programming / machine setup and operation
- Electrical and mechanical maintenance
- Applications engineering

Major Specifications

PUMA SMX series



Specification	Unit	PUMA SMX2600	PUMA SMX3100/L	PUMA SMX2600S	PUMA SMX3100S/LS
Chuck (Left spindle)	inch	10 {12}*	12 {15}*	10 {12}*	12 {15}*
Chuck (Right spindle)	inch	-		10 {12}*	
Max. turning diameter	mm (inch)	660 (26.0)			
Max. turning length	mm (inch)	1540 (60.6) [SMX3100L/LS : 2540(100)]			
Spindle speed	r/min	4000	3000	Left / Right : 4000	Left : 3000 Right : 4000
Motor power	kW (Hp)	26 / 22 (34.9 / 29.5)	30 / 25 (40.2 / 33.5)	26 / 22 (34.9 / 29.5)	30 / 25 (40.2 / 33.5)
Machine dimensions (L x W x H)	mm (inch)	4900 x 3011 x 2750 (192.9 x 118.5 x 108.3)	4900 x 3011 x 2750 / 6400 x 3011 x 2850 (192.9 x 118.5 x 108.3 / 252 x 118.5 x 112.2)	4900 x 3011 x 2750 (192.9 x 118.5 x 108.3)	4900 x 3011 x 2750 / 6400 x 3011 x 2850 (192.9 x 118.5 x 108.3 / 252 x 118.5 x 112.2)

*{ } Option

Doosan Machine Tools

http://www.doosanmachinetools.com
www.facebook.com/doosanmachinetools

Optimal Solutions for the Future

Head Office
Yeonkang Bldg., 6th FL., 270, Yeonji-dong, Jongno-gu, Seoul, Korea
Tel +82-2-3670-5345 / 5362
Fax +82-2-3670-5382

Doosan Machine Tools China
Room 101,201,301, Building 39 Xinzhuan Highway No.258 Songjiang District,China Shanghai(201612)
Tel +86 21-5445-1155
Fax +86 21-6405-1472

Doosan Machine Tools Japan
#2412, Mita Kokusai Bldg. 1-4-28 Mita, Minato-ku, Tokyo 108-0073, Japan
Tel +81 3 5730 9013
Fax +81 3 5730 9016

Doosan Machine Tools America
19A Chapin Rd., Pine Brook, NJ 07058, U.S.A.
Tel +1-973-618-2500
Fax +1-973-618-2501

Doosan Machine Tools Europe
Emdener Strasse 24, D-41540 Dormagen, Germany
Tel +49-2133-5067-100
Fax +49-2133-5067-111

Doosan Machine Tools India
106 / 10-11-12, Amruthahalli, Byatarayanapura, Bellary road, Bangalore-560 092, India
Tel +91-80-4266-0122 / 121 / 100

* For more details, please contact Doosan Machine Tools.
* The specifications and information above-mentioned may be changed without prior notice.
* Doosan Machine Tools Co., Ltd. is a subsidiary of MBK Partners. The trademark DOOSAN is used under a licensing agreement with Doosan Corporation, the registered trademark holder.