DAEHAN SENSOR

Capacitance Type Level Sensor with level switch

DC – Series

Level Switch with Contact – Output

Product Name

DC – 100S



INNOBIZ

ISO 9001

ISO 9001 인증업체

1993 DAEHAN SENSOR CO., LTD.
All rights reserved

Table of Contents

1. Introduction 3

2. Features 3

3. Specification 3

4. Installation 4

5. Calibration & Setting 4

6. Wiring Connection 5

7. Check Point Before A/S 6

Media : Powder, Solid, Liquid

Wiring : Input – 2 wire
Output – Max. 6 wire
(SPDT x 2ea)

Input Voltage : AC 220V

Output Signal : OUT1 – N/O, N/C
OUT2 – N/O, N/C

Temperature : –20℃ ~ 80℃

Pressure : 10Kgf/㎠

Waterproff / Dustproof : IP65

Material : Head Housing – A.B.S

Socket – SUS304
(Option – SUS316)

Insulator – P.E / P.T.F.E

Probe – SUS304
(Option– SUS316)

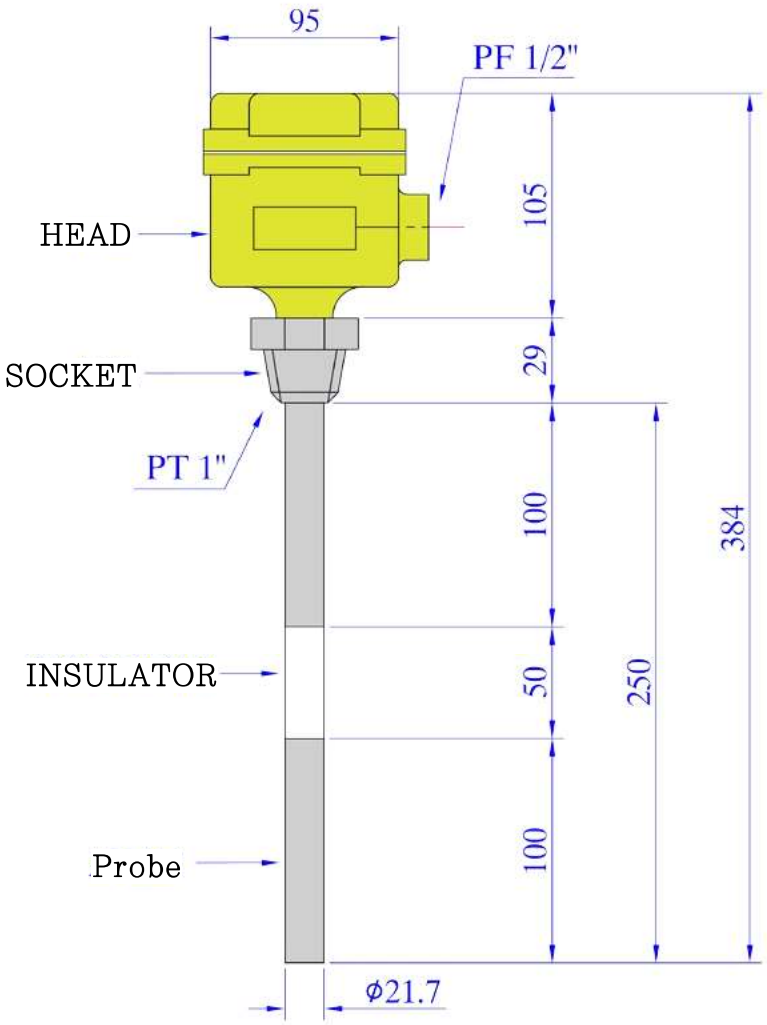

Introduction

The outage capacity type radio frequency level sensor is detected according to the change of outage formed between the earth electrodes when the measuring electrode and the electrode area are in the air and in the material.
This change alters the electrical control signal of the main unit that it is possible to receive the relay output point of contact.

Features

This precise sensor is easy to install and to use, so that widely used in the liquid application as well as solid application including grain, powder, sand, coal, and etc.

Installation

As shown in the picture, it is installed and using.

Check if the flanges specification(or socket) match between tank and product.

Insert a probe into the tank. Connect wiring between sensor contact Terminals & controller. between tank and product. Insert a probe into the tank.

Connect wiring between sensor contact terminals and controller.

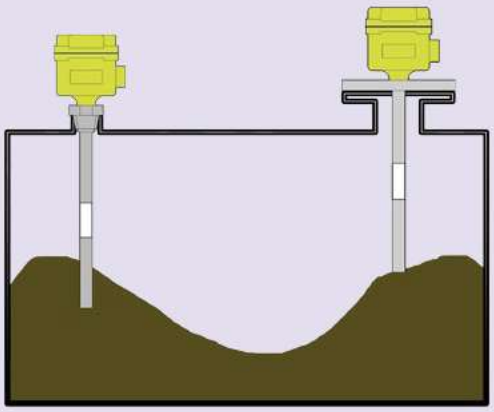

◎ Installation Cautiion ◎

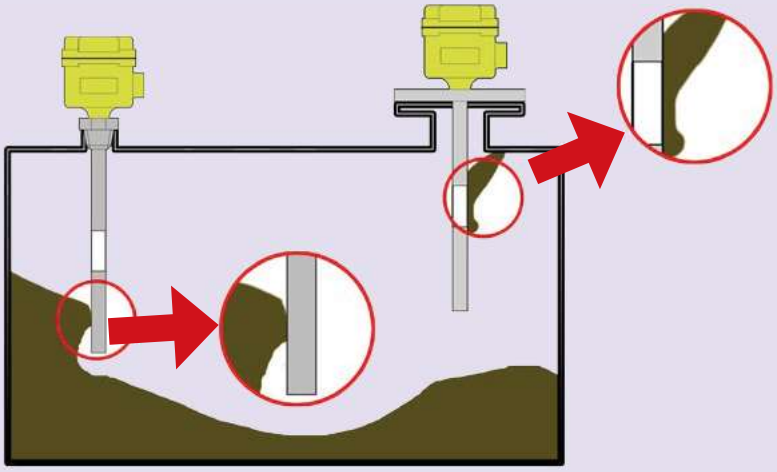

You should pay attention to the phenomenon when using for adhesive liquid, as shown in the picture. A malfunctioin is caused by the liquid attached to the sensing part.

Calibration

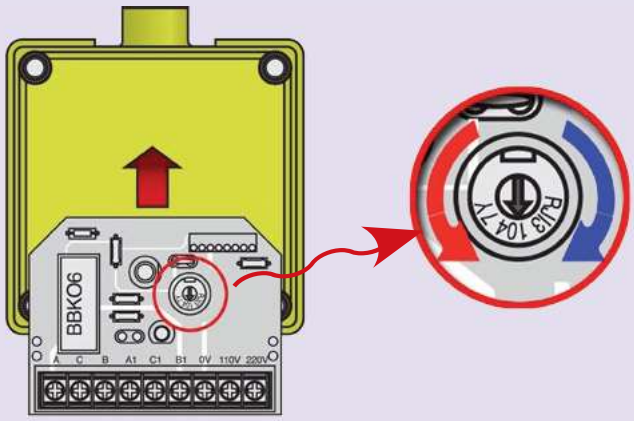

As shown in the picture, when it rotates in a clockwise direction, the range of sensitivity increases, when it rotates in a counter clockwise direction, the range of sensitivity is reduced.

Wiring Connection

Wiring to a Sequential Control

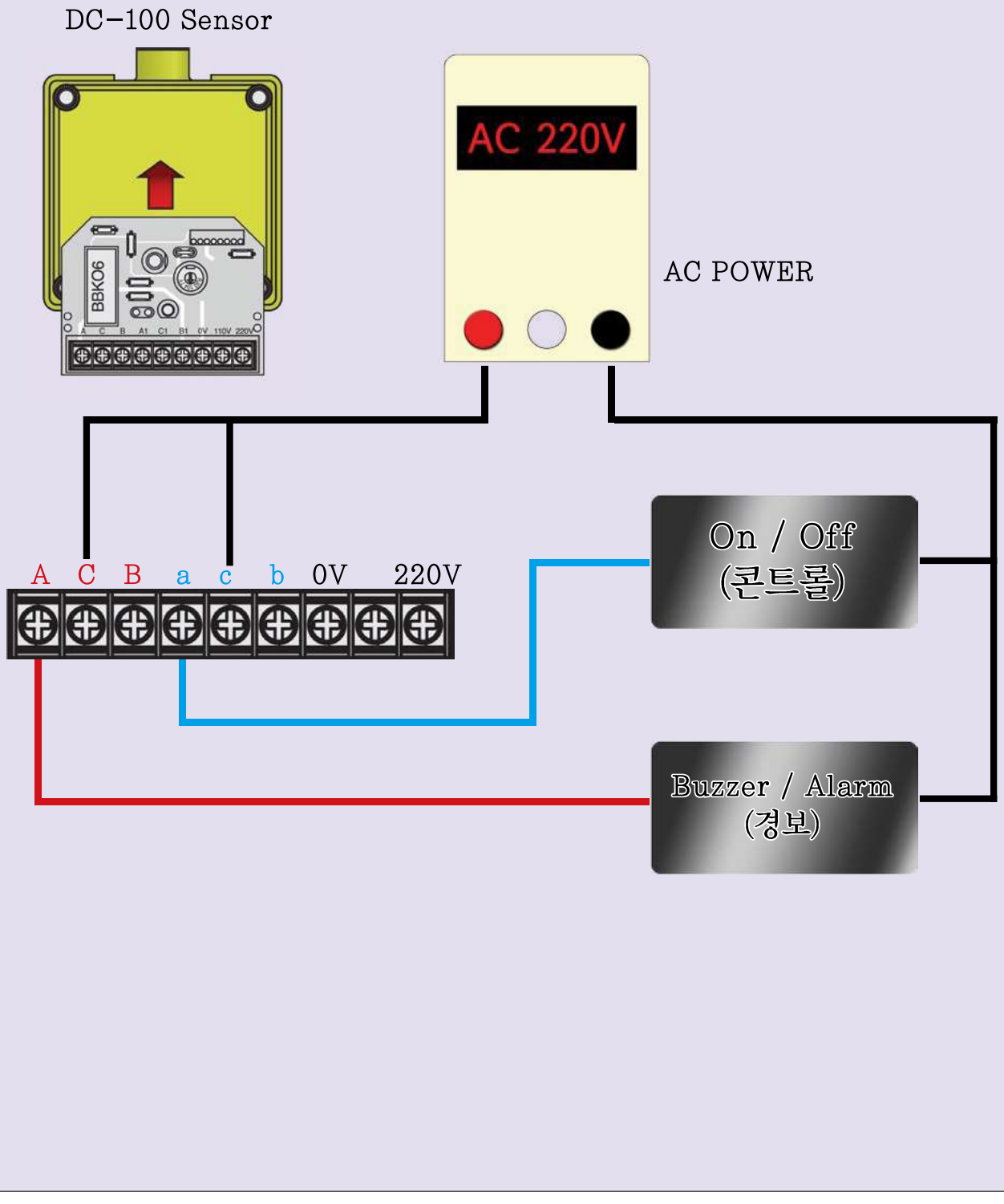

Check & A/S

The input voltage is normal?
: Check if the input of AC 220V/110V, is normally supplying.

The wiring is correct?
: Check the connect the wire short-circuit and / or poor contact.

The state of sensor is normal?
: Check if water or liquid exists inside of the sensor.

Head Office
94-2, Yongdap-dong, Seongdong-gu, Seoul, Korea

R&D Office
2-71, Jeonong-dong, Dongdaemun-gu, Seoul, Korea

Tel : 02-2213-9888(代) Fax : 02-2245-3482
e.mail : master@dh34.com Domain : www.dh34.com