www.grtec.co.kr

A company dedicated to save environment with clean water management

GREEN TECH PUMP

GVM

입축 사류 펌프

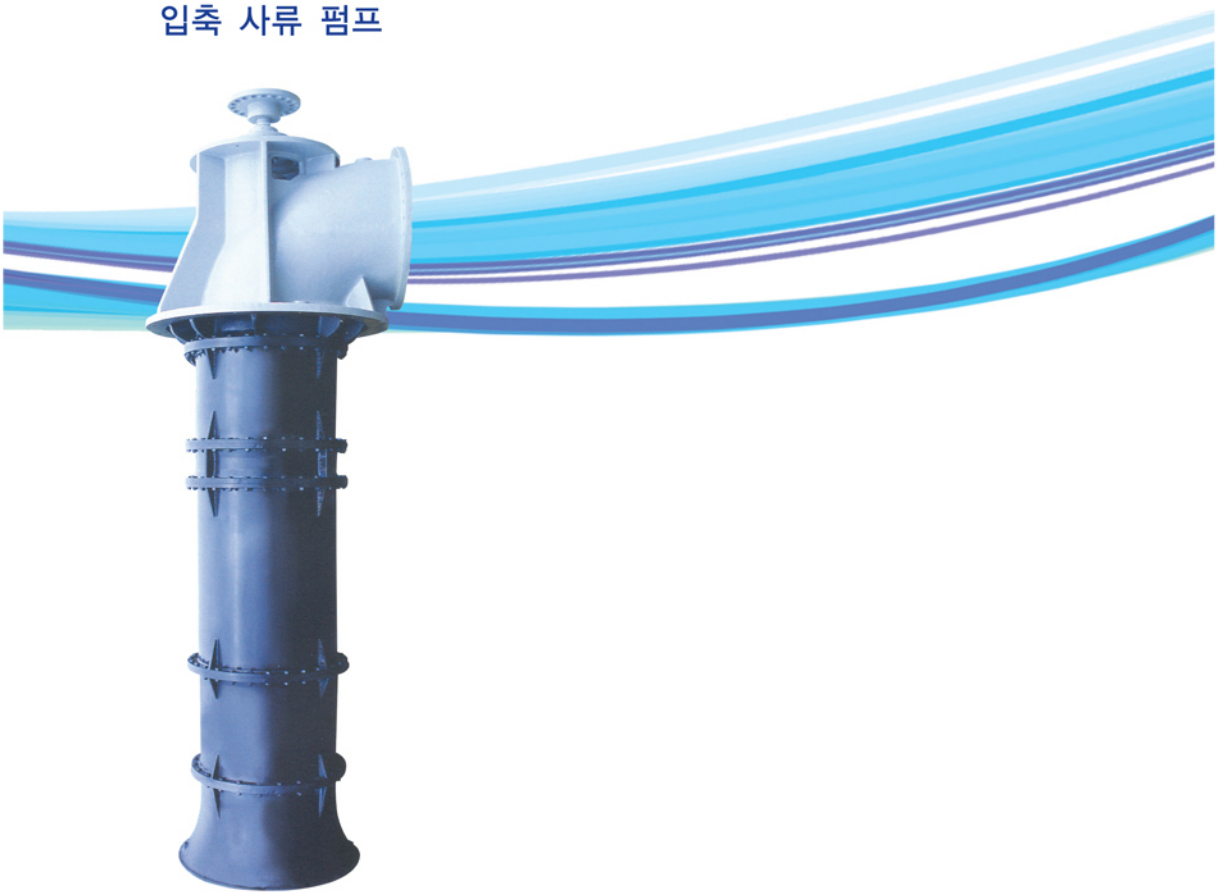

GREEN TECH Co., Ltd.
Pump & System Engineering

GVM
VERTICAL MIXED FLOW PUMP

VERTICAL MIXED FLOW PUMP/ 입축 사류 펌프

Usages and Applications / 용도 및 적용 분야

- General industries, factory : For water intake, supply, drainage
- Thermal power plant : For cooling water
- Ironworks : For circulation, drainage, scale pit
- Sewage system : For water influent, effluent
- Water works : For water intake, supply
- Agriculture : For water pumping, water supply
- Others : For dock drainage, river drainage

- 일반산업, 각종공장 : 취수, 송수, 배수
- 화력 발전소 : 냉각수용
- 제철소 : 순환, 배수, 스케일 피트용
- 하수도 : 유입, 방류
- 상수도 : 취수, 송수
- 농업 : 양수, 배수
- 기타 : 도크배수, 하천 배수

Design & Structure Feature / 설계 및 구조적 특징

- Installation : It has a various installation method to meet customer's requirement
- Rotation : CW viewed from driver
- Flange rating : KS 10Kg/㎠ FF
- Installation place : Indoor and outdoor
- Sleeve bearing : Rubber (water lubrication), Bronze (grease lubrication)
- Thrust bearing : Ball or roller bearing (oil lubrication)
- Impeller : Semi open type having blade of 3 demensions

- 설치방법 : 1상식 및 2상식
- 회전방법 : 구동기에서 보았을 때 우회전
- 토출 플랜지 : KS 10kg/㎠ FF
- 설치장소 : 옥내 및 옥외
- 슬리브 베어링 : 고무베어링 (물 윤활), 청동 (그리이스 윤활)
- 스러스트 베어링 : 볼 및 롤러 베어링 (오일 윤활)
- 임펠러 : 3차원 깃을 가진 SEMI OPEN형



Standard Specification / 표준사양

- Total head : 4 – 15m
- Capacity : 10 – 1000㎥/min
- Temp : 0 – 40℃
- Bore : 350mm – 2500mm

*Larger sizes are also available for customized specifications.

- 전양정 : 4 – 15m
- 유량 : 10 – 1000㎥/min
- 온도 : 0 – 40℃
- 구경 : 350mm – 2500mm

*상기 사양범위를 초과하는 대형 펌프도 제작합니다.

Sectional Drawing / 조립 단면도

GVM — Model Name (펌프 모델명)
900 — Discharge Bore (토출구경) [900mm]
A — Total Head (전양정)

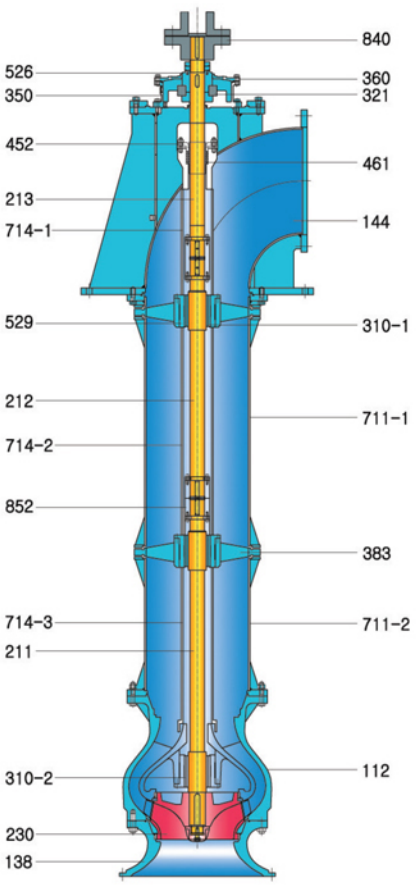

Part No. (품번)	Part Name (부품명)	Standard Material (표준재질) ASTM / KS			Q'ty (수량)
		CLASS1	CLASS2	CLASS3	
112	Guide Casing	A48-CL30 /GC200		A743-CF8 /SSC13	1
138	Suction Bell				1
144	Discharge Elbow				1
211	Shaft(Lower)	A108-1045 /SM45C	A276-304 /STS304		1
212	Shaft(Middle)				1
213	Shaft(Upper)				1
230	Impeller	A48-CL30 /GC200	A743-CF8 /SSC13	A743-CF8 /SSC13	1
310-1	Sleeve Bearing	RUBBER+A743-CF8 /RUBBER+SSC13			2
310-2	Sleeve Bearing				1
321	Ball Bearing	A295-52100 / STB2			1
350	Bearing Housing	A48-CL30 / GC200			1
360	Bearing Cover	A48-CL30 / GC200			1
383	Bearing Spider	A48-CL30 / GC200		A743-CF8 /SSC13	2
452	Packing Gland	A48-CL30 / GC200		A743-CF8 /SSC13	1
461	Packing	NON-METALLIC			5
526	Centering Sleeve	A108-1045 / SM45C			1
529	Bearing Sleeve	A276-304 / ST304			3
711-1	Column Pipe(Upper)	A53 Type F / SPP		A312-TP304 /STS304TP	1
711-2	Column Pipe(Lower)				1
•714-1	Shaft Pro.Pipe(Upper)	A312-TP304 /STS304TP			1
•714-2	Shaft Pro.Pipe(Middle)				1
•714-3	Shaft Pro.Pipe(Lower)				1
840	Coupling	A48-CL30 / GC200			1SET
852	Screwed Coupling	A276-304 / STS304			1SET

Legends (범례)
• : Option Parts (선택부품)

CLASS1 : Intake(취수), Industrial water(공업용수), Agricultural water(농업용수), Drainage(배수)
CLASS2 : Urbans(도시), Drainage at mills(고장배수), Filthy water(오수)
CLASS3 : Seawater(해수)
• Shaft protec.pipe is standard for only sewage system (influent & effluent)

Outline Drawing / 외형 치수도

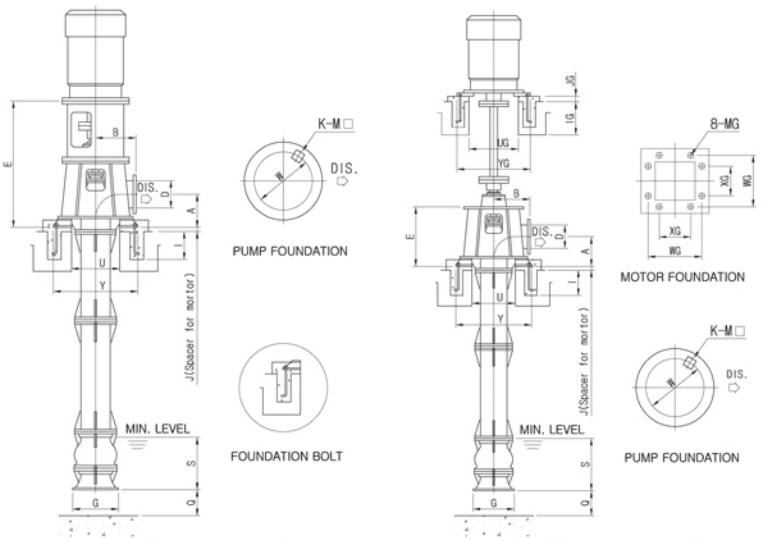

[1상식/One-Phase Type]　　[2상식/Two-Phase Type]

Model (형식)	Pump							Pump Base and Foundation						Motor Foundation						
	D	A	B	E	G	Q(min)	S(min)	Y	U	W	K-M	I	J	YG	UG	XG	WG	MG	IG	JG
GVM 350	350	450	550	800	550	400	800	1170	700	1100	4-190	500	30	1570	1200	800	1500	130	315	30
GVM 400	400	500	600	850	600	450	900	1230	750	1150	4-190	630	30	1670	1300	850	1600	130	315	30
GVM 450	450	530	650	900	680	500	1000	1380	850	1300	6-190	630	40	1770	1400	900	1700	130	315	40
GVM 500	500	570	700	950	750	550	1100	1480	950	1400	6-190	630	40	1870	1500	950	1800	130	315	40
GVM 600	600	620	700	1220	850	650	1250	1700	1100	1600	8-220	800	40	2170	1700	1000	2100	150	400	40
GVM 700	700	730	850	1250	1000	750	1500	1800	1200	1700	8-220	800	50	2370	1900	1200	2300	150	400	50
GVM 800	800	815	950	1425	1100	850	1650	1900	1300	1800	8-220	800	50	2600	2000	1400	2500	190	630	50
GVM 900	900	880	1050	1450	1250	950	1850	2100	1500	2000	8-260	1000	50	2800	2200	1600	2700	190	630	50
GVM 1000	1000	930	1150	1550	1450	1100	2150	2350	1700	2250	8-260	1000	50	3000	2400	1800	2900	190	630	50
GVM 1200	1200	900	1150	1600	1650	1300	2650	2400	1800	2350	12-220	1000	50	3000	2500	600	1800	200	630	50
GVM 1350	1350	1130	1100	1895	1750	1450	3050	2500	2100	2350	16-220	1000	50	3100	2600	600	2000	200	900	50
GVM 1500	1500	1550	1350	2400	1800	1600	3650	2700	2100	2500	16-260	1000	50	3300	2700	700	2100	220	900	50
GVM 1650	1650	2350	1500	2600	2300	1650	4125	3500	2900	3400	16-260	1000	50	3500	2900	800	2300	260	900	50
GVM 1800	1800	2700	1700	2800	2500	1800	4500	3700	3100	3600	16-260	1000	50	3700	3100	900	2500	260	900	50
GVM 2000	2000	3000	1800	3000	2800	2000	5000	3950	3300	3850	16-260	1000	50	3400	3300	1000	2700	260	1200	50
GVM 2200	2200	3300	1900	3200	3100	2200	5500	4100	3500	4000	16-260	1000	50	4100	3500	1100	2900	260	1200	50
GVM 2500	2500	3700	2100	3400	3500	2500	6250	4200	3700	4200	16-260	1000	50	4300	3700	1200	3100	260	1200	50

※ Note : All dimensions (millimeters) / Contact us for specific dimensions.

Selection Chart / 선정도

50Hz

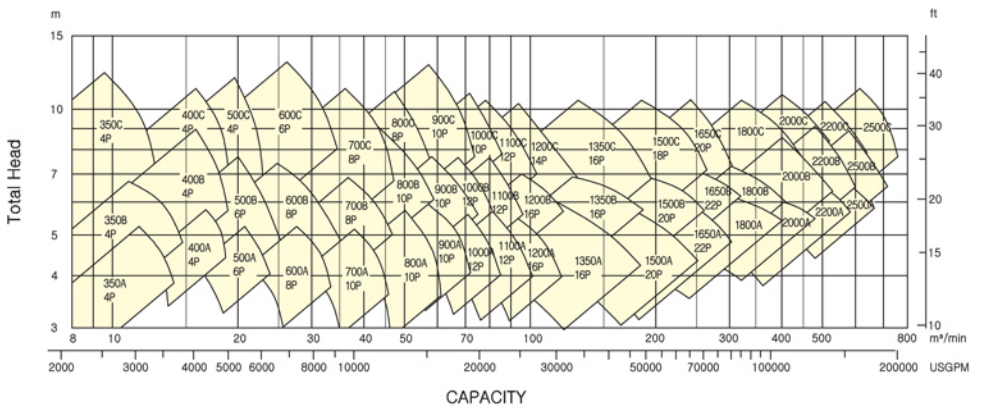

60Hz

