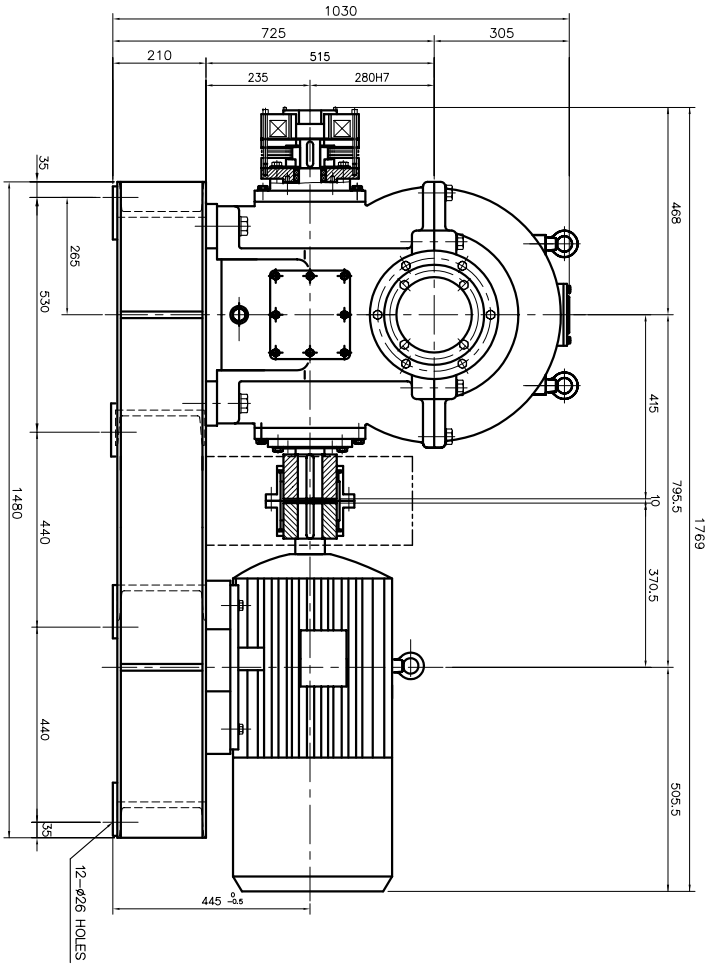
1030
725
305
210
515
235
280H7
35
265
530
440
440
35
1480
468
415
10
795.5
370.5
505.5
1769
445 +0.5 0
12-Ø26 HOLES

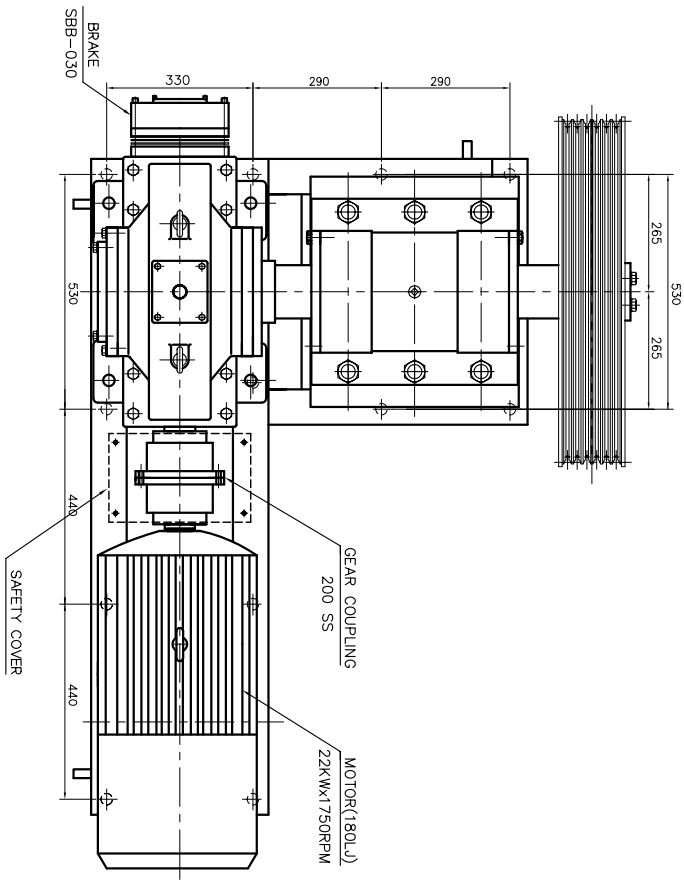
BRAKE
SBB-030
330
290
290
530
265
265
530
440
440
SAFETY COVER
GEAR COUPLING
200 SS
MOTOR(180LJ)
22KWx1750RPM

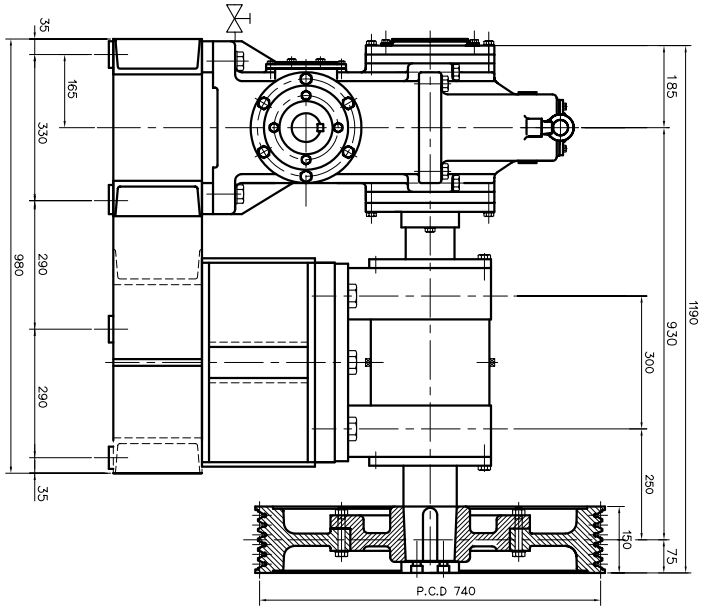
35
165
330
290
290
35
980
185
930
300
250
150
75
1190
P.C.D 740