The Kent Range of Bulk Meters

H4000 Woltmann cold water meters

The accurate, robust meter



H4000 Woltmann cold water meters

- **Multiple pulsed output for increased management information**
- **Extended low and high flow performance**
- **Water temperature up to 50°C**
- **Suitable for forward and reverse flow metering**
- **Robust shroud and copper can register for long life and clear readability**
- **Longer wear life for optimum accuracy**
- **Exceeds Class B specification in forward direction and for sizes up to 150mm in reverse direction**

The H4000 is a Woltmann-type meter designed for measuring bulk flows of cold potable water for revenue billing in commercial or industrial applications and distribution system monitoring.

Available in ten sizes for flow rates between 0.35 m^3/h and 2000 m^3/h, the H4000 operates at temperatures up to 50°C and a maximum working pressure of 16 Bar. Accuracy is maintained in both forward and reverse flow, and various register options are available to suit different applications. The meter complies with all relevant international quality standards, substantially exceeding ISO4064 BS5728 Class B specifications for forward flow installations in horizontal, vertical and inclined pipelines.

Reverse flow metering

Available in sizes up to 150mm, reverse flow metering aids network management and ensures accuracy in revenue billing applications.

Robust construction

Like all Elster meters, the H4000 is manufactured from the highest quality materials for maximum resistance to wear and corrosion. Meter body and cover are epoxy powder coated for protection in all environments. Thrust pads and stub spindles are manufactured in tungsten carbide and jewelled rotor bearings are used for maximum wear life. All wetted materials are UK WRc approved against health risk.

In-line strainer

The use of an Elster in-line strainer is recommended to protect the rotor and help reduce the effect of turbulence.



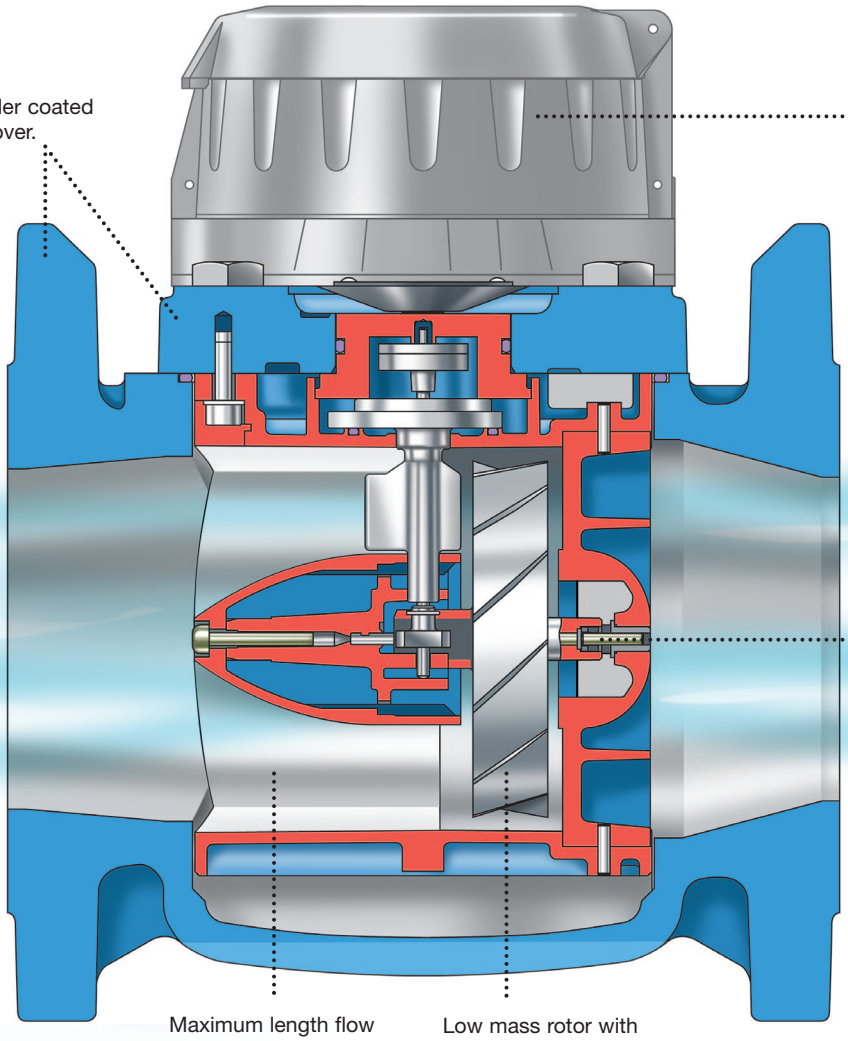

Pulse outputs

Pulsers designed for use with H4000 meters offer a choice of outputs for a wide variety of applications including revenue billing, automatic meter reading, datalogging and process control applications. If required, two pulsers can simultaneously provide data for both long term logging and specific fine analysis, enabling individual measurements to be taken without interrupting ongoing data capture. Two types of pulser are available: opto-electronic and reed switch. Both are of durable design and construction and can easily be fitted on site without disturbing the calibration seal or interrupting the water supply.



Opto-Electronic Pulser

Applications include all forms of high resolution testing for fine analysis of flow data. Typical uses are step-testing in distribution systems or for industrial process control.
An electronic circuit processes the output for interfacing with other equipment, providing both bi-directional and uni-directional information in multiple formats.

Electrical Data

The output stages are transistors configured as open-collectors with 300 Ohm series resistors for surge protection, with 1nF parallel capacitors to 0V.
Maximum output 'pull-up' voltage: 30V dc
Maximum output 'sink' current: 25mA
Supply voltage: 4.5 to 16V dc
Typical supply current @ 5V: 350µA

Mechanical Data

Dimensions:
Sensor: 85mmx30mmx15mm
Elec.Housing: 95mmx40mmx20mm
Temperature Range: –10˚C to +70˚C
Protection Rating: IP68
Cable: 6 core screened, 2m or 5m long with bare wire termination or fitted with compatible plugs.
Also available with a bi-directional NAMUR-compatible output to DIN 19234.

Volt-Free Pulser

The unit is a uni-directional pulser designed to interface with almost all datalogger products, providing a pulse resolution in accord with the fitted position on the register.

Electrical Data

A 100 Ohm resistor is wired in series with the reed switch for surge protection.
Maximum switching voltage: 24V dc
Maximum switching current: 50mA
Maximum switching power: 0.25W

Mechanical Data

Dimensions: 25mm x 20mm x 10mm
Temperature Range: –10˚C to +70˚C
Protection Rating: IP67
Cable: 2 core, 2m or 5m long with bare wire termination or fitted with compatible plugs.

Also available with a factory fitted Pulse-Splitter to provide two diode-isolated pulse outputs.

Pulse output 40mm – 125mm

Option	1:1 Optical	1:10 Reed	1:100 Reed	1:1000 Reed
A	✓			
B	✓		✓	✓
C	✓	✓		✓

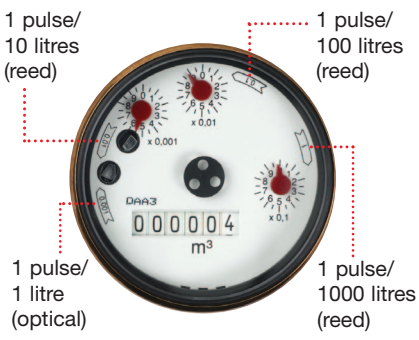

Pulse output 150mm – 300mm

Option	1:10 Optical	1:100 Reed	1:1000 Reed	1:10000 Reed
A	✓			
B	✓		✓	✓
C	✓	✓		✓

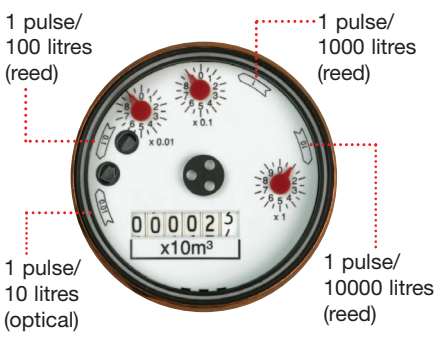

Illustrations are for diagrammatical purposes only.

H4000
Performance to ISO4064, BS5728 Class B

Specifications

H4000 Performance (forward flow)											
Meter size (mm)			40	50	65	80	100	125	150	200	250	300
Overload flow	qs±2%	m^3/h	90	90	120	200	250	250	600	1000	1600	2000
Permanent flow	qp±2%	m^3/h	50	50	65	120	180	180	450	700	1000	1500
Transitional flow	qt±2%	m^3/h	1	1	1.5	2	2	2	4	6	11	15
Minimum flow (horizontal)	qmin±5%	m^3/h	0.35	0.35	0.4	0.5	0.6	0.6	1.8	4	6	12
Minimum flow (vertical)	qmin±5%	m^3/h	0.45	0.45	0.75	1.2	1.2	1.2	4.5	7.5	12	18
Starting flow (approx.)		m^3/h	0.15	0.16	0.17	0.22	0.25	0.25	0.90	1.2	1.8	1.8
Headloss at maximum flow		Bar	0.84	0.49	0.69	0.27	0.43	0.58	0.33	0.32	0.37	0.58
Maximum registration		millions of m^3	1	1	1	1	1	1	10	10	10	10
Maximum water temperature		°C	50	50	50	50	50	50	50	50	50	50
Maximum working pressure		Bar	16	16	16	16	16	16	16	16	16	16

Standard ISO4064/BS5728/EEC specification Class B												
Overload flow	qs±2%	m^3/h	–	30	50	80	120	200	300	500	800	1200
Permanent low	qp±2%	m^3/h	–	15	25	40	60	100	150	250	400	600
Transitional flow	qt±2%	m^3/h	–	3	5	8	12	20	30	50	80	120
Minimum flow	qmin±5%	m^3/h	–	0.45	0.75	1.2	1.8	3.0	4.5	7.5	12	18
Headloss at maximum flow		Bar	–	0.05	0.12	0.04	0.10	0.37	0.10	0.10	0.09	0.21
Headloss class		Bar	–	0.10	0.30	0.10	0.10	0.60	0.10	0.10	0.10	0.30

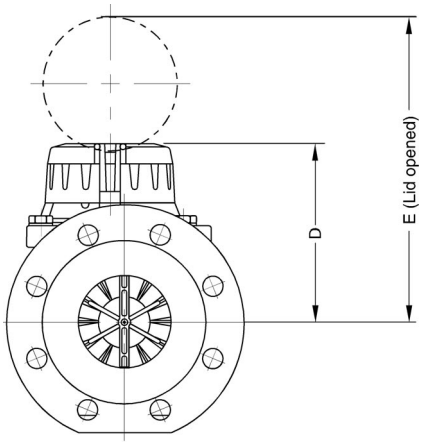

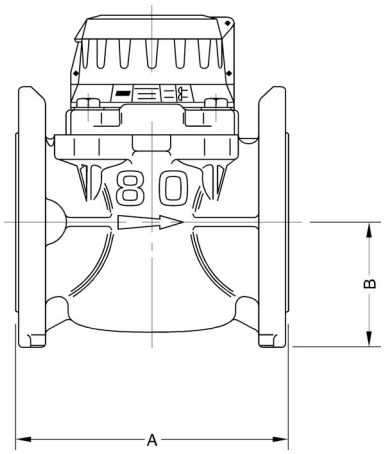

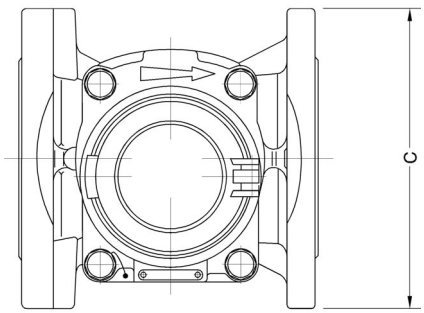

Dimensions and weights										
Meter size (mm)		40	50	65	80	100	125	150	200	250	300
Overall length (ISO) (A)	mm	300	200/300	200/300	200/350	250/350	250	300/500	350	450	500
Overall length (Kent) (A)	mm	311	311	–	413	483	–	–	520	–	–
Height (B)	mm	78	78	86	94	106	118	135	165	198	225
Height (D)	mm	142	142	142	153	153	153	200	222	240	240
Height (E)	mm	250	250	250	261	261	261	308	330	348	348
Flange Diameter (C)	mm	151	166	186	201	228	251	286	341	409	461
Weight (ISO)	kg	11.8	12.2/13.1	13/14.4	14.1/16.6	19.4/21	20.5	37.5/43.5	47.5	82	104
Weight (Kent)	kg	12	13.3	–	17.6	23.6	–	–	54	-	-

H4000
Performance to ISO4064, BS5728 Class B

Typical Accuracy Curve

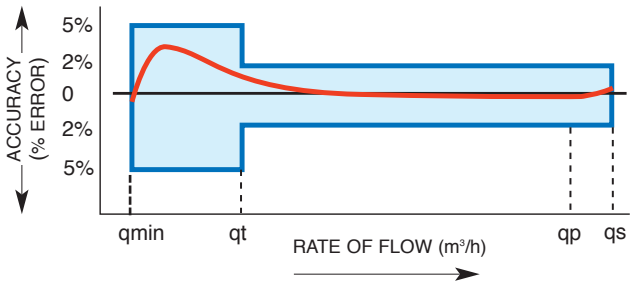

Typical Head Loss Curve

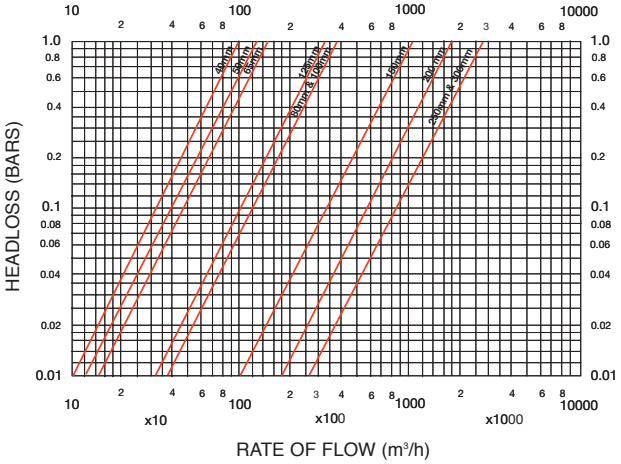

Pressure equipment directive 97/23/EC
This product is applicable in networks for the supply, distribution and discharge of water and associated equipment and is therefore exempt.

Elster Metering Limited
Pondwicks Road
Luton, Bedfordshire
LU1 3LJ, United Kingdom
Telephone +44 (0)1582 402020
Facsimile +44 (0)1582 438051
Website: www.elstermetering.com
E-mail: water.metering@gb.elster.com

8504C4243

The Company's policy is one of continuous improvement and the right is reserved to modify the specifications without notice.