OP(Order Picker) LEVER SWITCH

MODEL DSC OP(Order Picker) LEVER SWITCH

Dong-Suh Control Co.,Ltd.



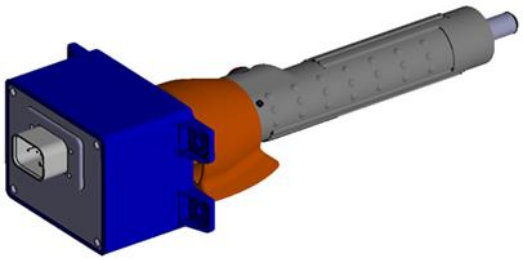

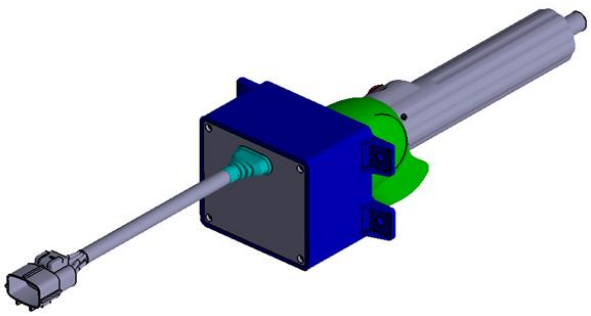

DESCRIPTION

The DSC OP(Order Picker) Lever Switch is designed with the operator's comfort in mind and the grip handle will help the operator to create an efficient and effective work environment and will help to maximize the operator productivity.

APPLICATION

The DSC OP Lever Switch can be used for order picker forklift truck.

FEATURES

- Reliable operation in the most demanding order picker forklift truck duty applications.
- Optimized design and lever operating
- Contactless sensing type with hall effect technology
- Connector and wire type are available

SPECIFICATIONS(TYPICAL)

- Rated Input Voltage : DC 5 V
- Operating Current : 30mA(Normal), 40mA(Max)
- Operating Temperature : -30°C to +70°C
- Storage Temperature : -40°C to +80°C
- Fully resistant to EMI/EMS
- Moisture resistance to IP64 specifications(Horn Switch)

www.dscontrol.co.kr

Note: As all contents in this catalogue is the typical information, it is subject to change without notice for product improvement and it could be different depending on the products.

MODEL DSC OP(Order Picker) LEVER SWITCH

DIMENSIONS mm

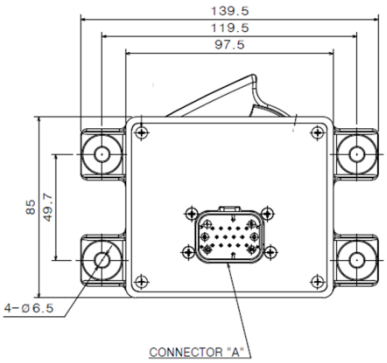

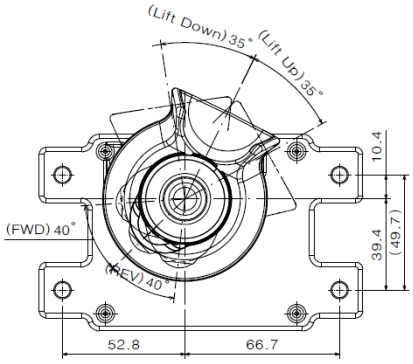

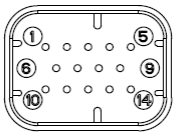

* HOUSING P/N: TYCO 776262-1
* COUNTER P/N: TYCO 776273-1

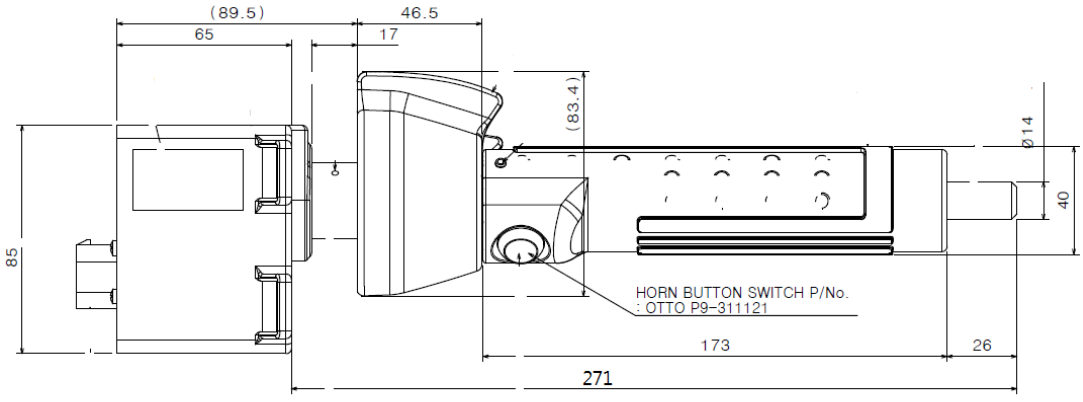

PERFORMANCE

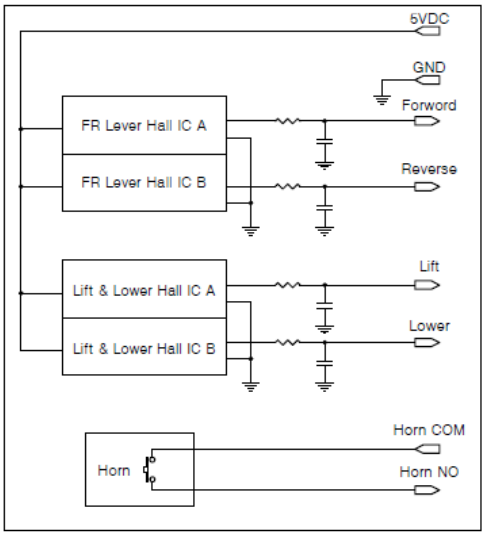

ELECTRICAL SCHEMATIC

