ANG series


ANGM 12-S75

Features

- Built in magnet and rubber bumper (Standard).
- Resists lateral loading and provides non-rotating motion.
- Sliding bearing and ball bearing are available depending on applications.

Symbol
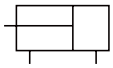
Double Acting / Single Rod

How to Order

ANG ① [M] ② - [20] ③ - S [75] ④ [A73K] ⑤ [S] ⑥

① Series

ANG	Compact guide cylinder

② Bearing

M	Sliding bearing
L	Ball bearing

③ Bore size

12	Ø12	40	Ø40
16	Ø16	50	Ø50
20	Ø20	63	Ø63
25	Ø25	80	Ø80
32	Ø32	100	Ø100

④ Cylinder stroke

Bore size	Standard stroke
Ø12	10, 20, 30, 40, 50, 75, 100
Ø16	
Ø20	20, 30, 40, 50, 75, 100
Ø25	
Ø32	25, 50, 75, 100, 125, 150
Ø40	
Ø50	
Ø63	
Ø80	
Ø100	

※ As to intermediate stroke (5, 10, 15, 20...), spacer of 5, 10, 15, 20mm width will be inserted.

Ex) ANGM20-S25 is produced by insert a 5mm spacer in ANGM20-S30. Thus, ANGM20-S25 and ANGM20-S30 dimension are same.

⑤ Auto switch

Reed A/S	Model	Solid state A/S	Model
Nil	None	Nil	None
A-72	D-A72K	F-7NV	D-F7NVK
A-73	D-A73K	F-7PV	D-F7PVK
A-80	D-A80K	F-7BV	D-F7BVK

※ Refer to Auto Switch Catalogue for more information.

⑥ Number of auto switches

Nil	2 pcs
1	1 pc
N	N pcs (N:3,4,5...)

※ Only for auto switch attached type.

Specifications

Type	Double acting	
	Ø12, Ø16	Ø25~Ø100
Fluid	Air	
Proof pressure	14.7kgf/cm²(1.5MPa)	
Max. operating pressure	9.9kgf/cm²(1.0MPa)	
Min. operating pressure	1.2kgf/cm² (0.12MPa)	1.0kgf/cm² (0.1MPa)
Ambient & fluid temperature	-10℃~+60℃	
Operating piston speed	50~500mm/s	
Cushion	Both side rubber bumper	
Lubrication	Not required	
Tolerance of stroke	$^{+1.5}_{0}$ mm	

Non-Rotating Load Capability

Bore size (mm)	Non-rotating accuracy θ	
	ANGM	ANGL
Ø12	±0.07°	±0.10°
Ø16		
Ø20	±0.06°	±0.09°
Ø25		
Ø32	±0.06°	±0.08°
Ø40		
Ø50	±0.05°	±0.06°
Ø63		
Ø80	±0.04°	±0.05°
Ø100		

Structures

ANGM TYPE

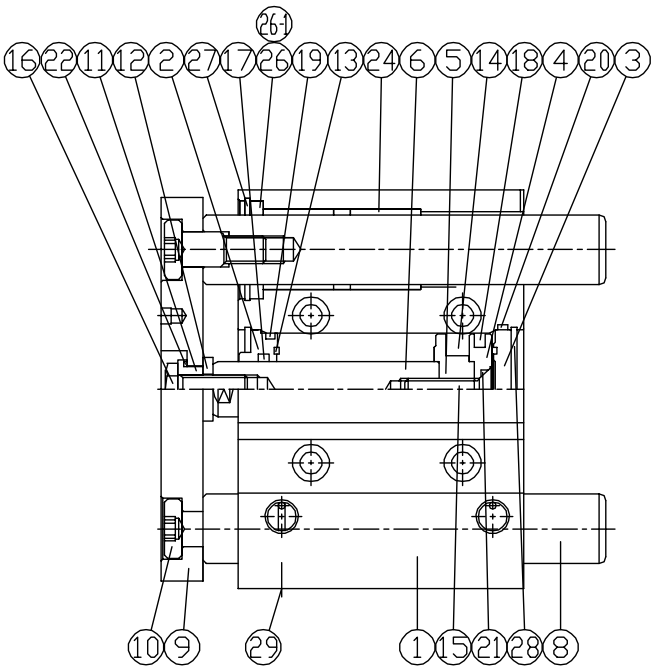

ANGL TYPE

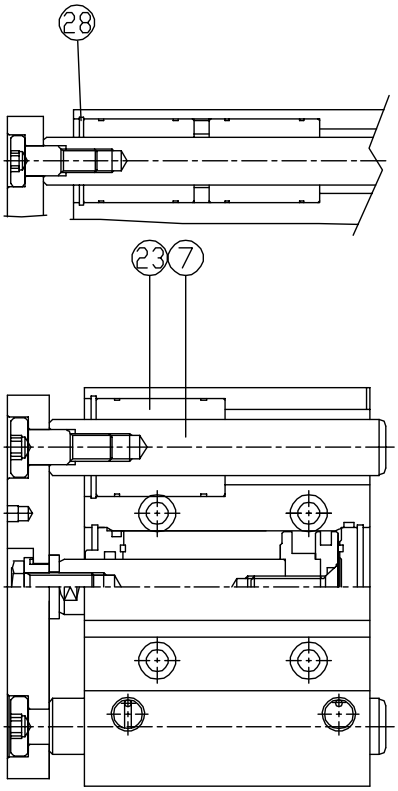

Part no.	Parts	Material	Remarks
1	Tube	A6063-T5	
2	Rod Cover	C3604	
3	Head Cover	A6061	
4	Piston	A6061	
5	Magnet Holder	A6061	
6	Rod	SM45C	
7	Guide Rod	SUJ2	(ANGL)
8	Guide Rod	SM45C	(ANGM)
9	Plate	SS400	
10	Guide Rod Bolt	SM45C	
11	Retainer	SM45C	

Part no.	Parts	Material
12	Retainer Washer	SM45C
13	Damper	URETHANE
14	Magnet	
15	Bolt	SCM435
16	Plate Bolt	SS400
17	Rod Packing	N.B.R
18	Piston Packing	N.B.R
19	Tube O-Ring	N.B.R
20	Cover O-Ring	N.B.R
21	Rod O-Ring	N.B.R
22	O-Ring	N.B.R

Part no.	Parts	Material
23	Ball Bush	SUS440C
24	Du Bush	SPCC
25	Snap Ring	STC5
26	Seal Ring	SS400
26-1	Felt Seal	FELT
27	Snap Ring	STC5
28	Snap Ring	STC5
29	Plug	SS400
30	Set Screw	SCM440
31	Guide Spacer	A6061

Mass

Unit : kg

Bore size (mm)	Stroke - ANGM(Sliding Bearing type)									
	10	20	25	30	40	50	75	100	125	150
Ø12	0.24	0.28	-	0.31	0.35	0.39	0.50	0.60	-	-
Ø16	0.35	0.40	-	0.45	0.51	0.55	0.70	0.82	-	-
Ø20	-	0.71	-	0.79	0.87	0.97	1.15	1.34	-	-
Ø25	-	1.04	-	1.14	1.25	1.35	1.73	2.00	-	-
Ø32	-	-	1.81	-	-	2.20	2.58	2.98	3.39	3.78
Ø40	-	-	1.91	-	-	2.50	2.72	3.31	3.82	4.13
Ø50	-	-	3.40	-	-	3.96	4.52	5.06	5.63	6.19
Ø63	-	-	3.93	-	-	4.55	5.15	5.77	6.39	7.01
Ø80	-	-	6.99	-	-	7.92	88.82	9.74	10.67	11.58
Ø100	-	-	11.04	-	-	12.35	13.65	14.98	16.31	17.64

Unit : kg

Bore size (mm)	Stroke - ANGL(Ball bearing type)									
	10	20	25	30	40	50	75	100	125	150
Ø12	0.24	0.26	-	0.30	0.35	0.39	0.48	0.56	-	-
Ø16	0.35	0.38	-	0.43	0.53	0.59	0.68	0.80	-	-
Ø20	-	0.72	-	0.80	0.91	0.99	1.18	1.35	-	-
Ø25	-	1.05	-	1.15	1.32	1.43	1.71	1.91	-	-
Ø32	-	-	1.53	-	-	1.87	2.29	2.65	3.01	3.37
Ø40	-	-	1.69	-	-	2.04	2.50	2.86	3.22	3.58
Ø50	-	-	2.83	-	-	3.31	3.91	4.40	4.89	5.38
Ø63	-	-	3.47	-	-	4.00	4.66	5.20	5.74	6.28
Ø80	-	-	5.54	-	-	6.43	8.00	8.84	9.68	10.52
Ø100	-	-	10.27	-	-	11.46	13.71	14.89	16.07	17.26

Dimensions - Ø12 ~ Ø25

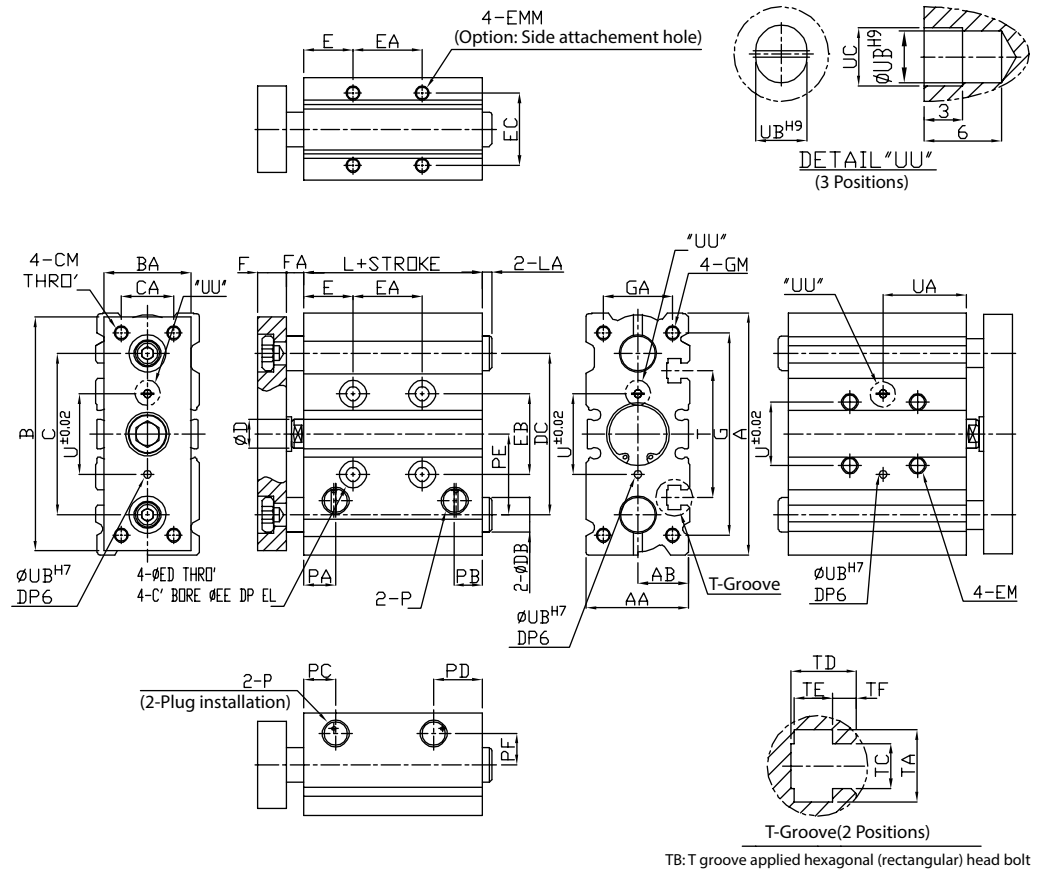

TB: T groove applied hexagonal (rectangular) head bolt

Unit : mm

Bore size (mm)	A	AA	AB	B	BA	C	CA	CM	D	DB		DC	F	FA	G	GA	GM	P	PA	PB	PC	PD	PE
										M (Sliding bearing)	L (Ball bearing)												
Ø12	61	26	13	56	22	48	14	M4X0.7	6	8	6	44	8	5	50	18	M4X0.7 DP6	M5X0.8	14.5	12	14.5	12	10.5
Ø16	68	30	15	62	25	54	16	M5X0.8	8	10	8	48	8	5	56	22	M5X0.8 DP8	M5X0.8	15	12	14.5	15	12
Ø20	84	36	18	81	30	70	18	M5X0.8	10	12	10	56	10	6	72	24	M5X0.8 DP10	PT1/8	11	9.5	11	22	23
Ø25	96	42	21	91	38	78	26	M6X1.0	12	16	13	66	10	6	82	30	M6X1.0 DP12	PT1/8	11.5	10	11.5	22.5	29

Bore size (mm)	PF	T	TA	TB	TC	TD	TE	TF	E	EA				EB	EC	ED	EE	EL	EM	EMM	L	U	UB	UC
										≤30	30~100	100~200	200~300											
Ø12	8	37	7.4	M4	4.4	6.2	3.7	2	5	20	40	110	-	23	18	4.3	8	4.5	M5X0.8 DP10	M4X0.7 DP6	29	23	3	3.5
Ø16	10	38	7.4	M4	4.4	6.7	3.7	2.5	5	24	44	110	-	24	22	4.3	8	4.5	M5X0.8 DP10	M5X0.8 DP8	33	24	3	3.5
Ø20	11	44	8.4	M5	5.4	7.5	4.5	2.5	17	24	44	120	200	28	25	5.2	9.5	5.5	M6X1.0 DP10	M5X0.8 DP8	37	28	3	3.5
Ø25	14	50	8.4	M5	5.4	7.5	4.5	2.5	17	24	44	120	200	34	30	5.2	9.5	5.5	M6X1.0 DP12	M6X1.0 DP12	37.5	34	4	7.2

Bore size (mm)	LA															UA			
	M (Sliding bearing)					L (Ball bearing)										≤30	30~100	100~200	200~300
Ø12	≤30	30~50	50~150	150~200	200~300	≤10	10~30	≤20	20~30	30~50	50~100	100~150	150~200	200~300					
Ø16	3	3	37		-	0	14	-	-	24	29	34	39	-		15	25	60	-
Ø20	5	9	38	43	-	0	20	-	-	30	35	45	55	-		17	27	60	-
Ø25	3.5	6.5	46.5			-	-	0	26	36	41	51	61	76		29	39	77	117
Ø25	3	6	46	56	61	-	-	0	0	37	47	57	72	87		29	39	77	117

Dimensions - 32 ~ Ø63

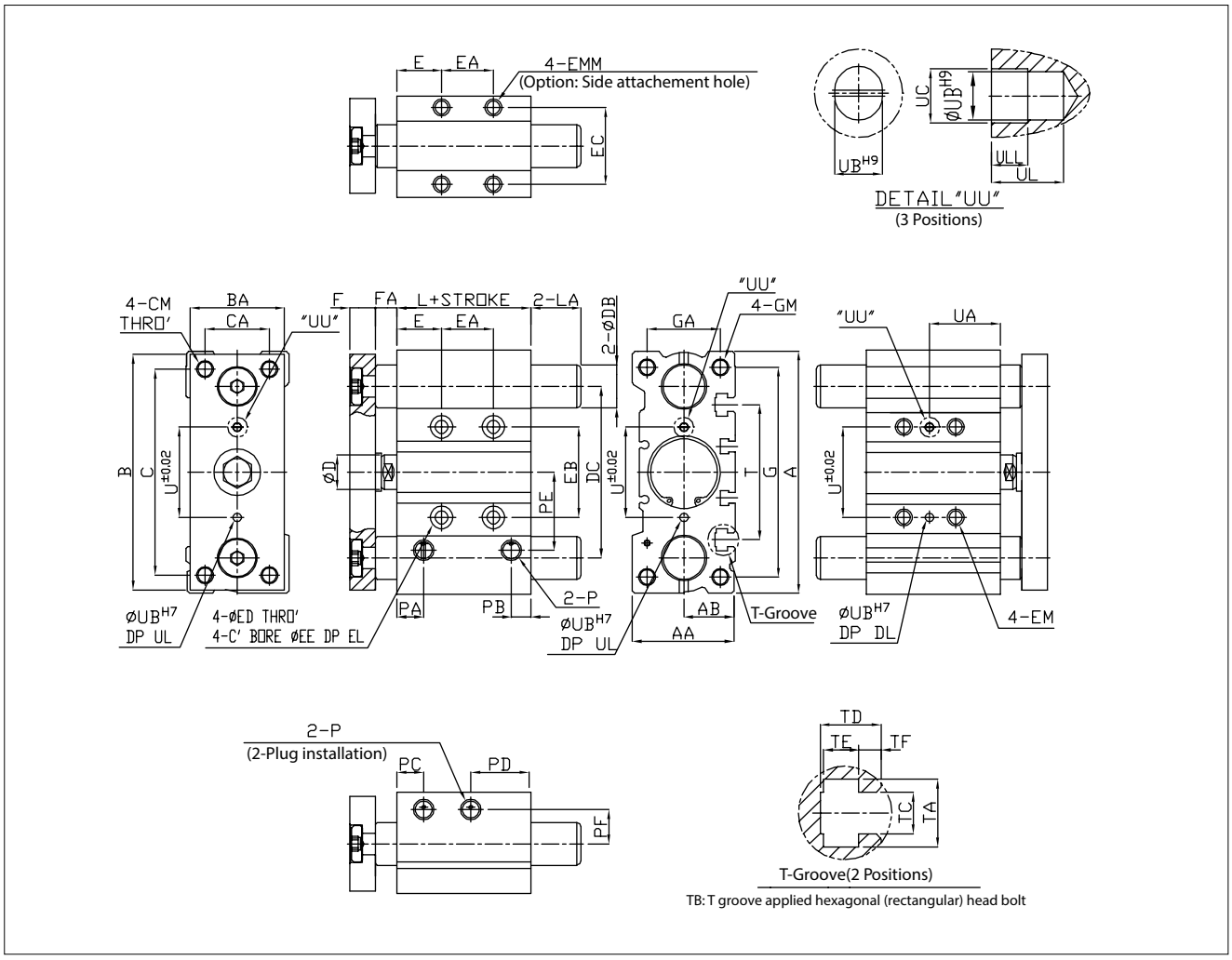

Unit: mm

Bore size (mm)	A	AA	AB	B	BA	C	CA	CM	D	DB		DC	F	FA	G	GA	GM	P	PA	PB	PC	PD	PE
										M (Sliding bearing)	L (Ball bearing)												
Ø32	113	48	24	110	44	96	30	M8X1.25	16	20	16	80	12	10	98	34	M8X1.25 DP16	1/8	12.5	9	12.5	28	36.5
Ø40	121	54	27	118	44	104	30	M8X1.25	16	20	8	87	12	10	106	40	M8X1.25 DP16	1/8	1.4	10.5	14	30	40.5
Ø50	149	64	32	146	60	130	40	M10X1.5	20	25	20	110	16	12	130	46	M10X1.5 DP20	1/4	14.5	11	12	35	48.5
Ø63	162	77.5	39	158	70	130	50	M10X1.5	20	25	20	124	16	12	142	58	M10X1.5 DP20	1/4	16.5	13.5	16.5	35	55

Bore size (mm)	PF	T	TA	TB	TC	TD	TE	TF	E	EA				EB	EC	ED	EE	EL	EM	EM	L
										≤25	25~100	100~200	200~300								
Ø32	16	63	10.5	M6	6.5	9	5.5	3	21	24	48	124	200	42	36	6.6	11	7.5	M8X1.25 DP16	M8X1.25 DP12	37.5
Ø40	18	72	10.5	M6	6.5	10.5	5.5	4	22	24	48	124	200	50	38	6.6	11	8.5	M8X1.25 DP16	M8X1.25 DP12	44
Ø50	21	92	13.5	M8	8.5	13	7.5	4.5	24	24	48	124	200	66	46	8.6	14	12	M10X1.5 DP20	M10X1.5 DP12	44
Ø63	26.5	110	17.5	M10	11	19	10	7.5	24	28	52	128	200	80	52	8.6	14	15	M10X1.5 DP20	M10X1.5 DP18	49

Bore size (mm)	U	UB	UC	UL	ULL	LA										EA			
						M (Sliding bearing)					L (Ball bearing)					≤25	25~100	100~200	200~300
						≤25	25~50	50~100	100~150	150~300	≤25	25~50	50~100	100~150	150~300				
Ø32	42	4	4.5	6	3	23.5	41.5	46.5	51.5	71.5	4.5	41.5	46.5	66.5	91.5	33	45	83	121
Ø40	50	4	4.5	6	3	17	35	40	45	65	0	35	40	60	85	34	46	84	122
Ø50	66	5	6	8	4	24	40	50	55	75	3	45	50	70	95	36	48	86	124
Ø63	80	5	6	8	4	19	35	45	50	70	0	40	45	65	90	38	50	88	124

Dimensions -Ø80 ~ Ø100

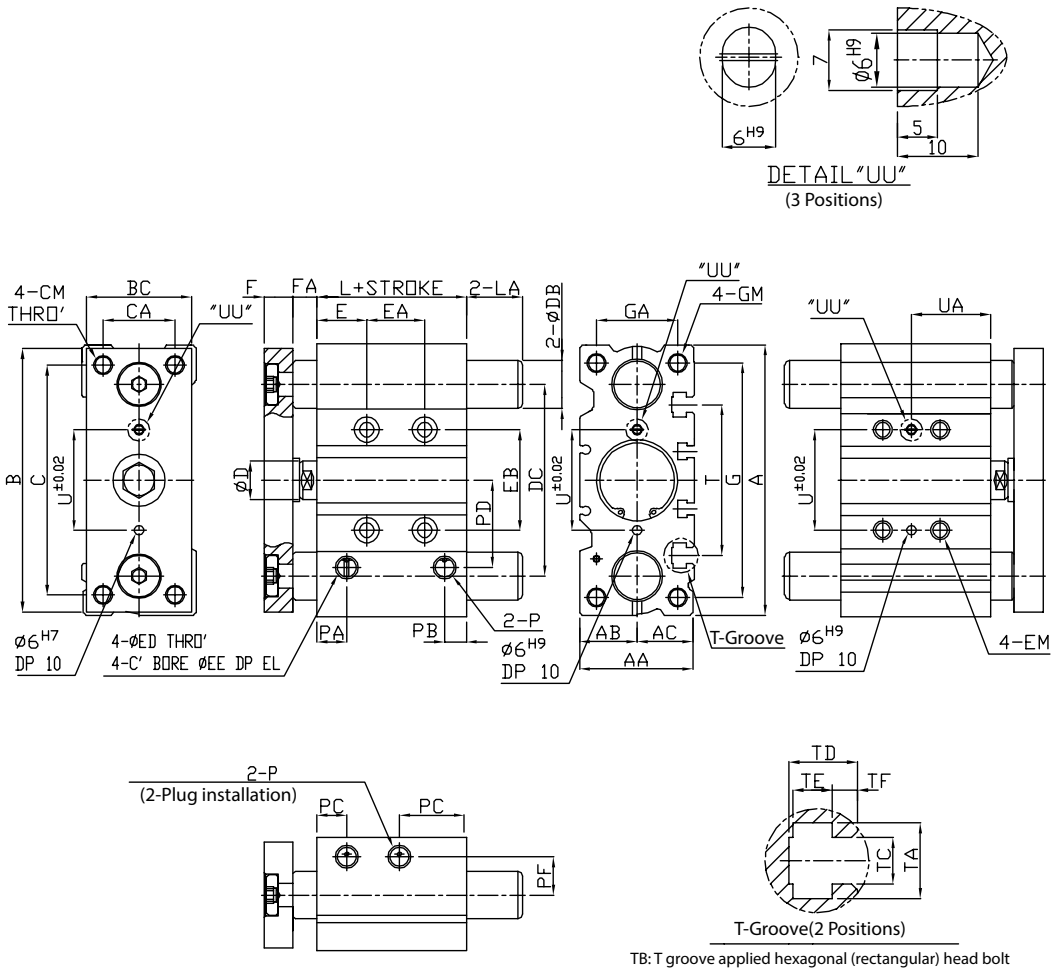

Unit: mm

Bore size (mm)	A	AA	AB	AC	B	BA	C	CA	CM	D	DB		DC	F	FA	G	GA	GM	P
											M (Sliding bearing)	M (Sliding bearing)							
Ø80	204	86.25	46.5	46	198	75	174	52	M12X1.75	25	30	25	155	22	18	180	54	M12X1.75 DP18	3/8
Ø100	238	102.75	55.5	56	236	90	210	64	M14X2.0	30	36	30	184	25	25	210	62	M14X2.0 DP25	3/8

Bore size (mm)	P	PA	PB	PC	PD	PE	T	TA	TB	TC	TD	TE	TF	E	EA			EB	ED
															≤25	50~100	25~200		
Ø80	3/8	19	15.5	36	75	27.25	140	20.3	M12	13.3	22.5	12	12	28	28	52	128	100	10.6
Ø100	3/8	23	19	41	89	33.75	166	23.3	M14	15.3	26.5	13.5	13.5	11	48	72	148	124	12.5

Bore size (mm)	EE	EL	EM	L	LA								U	UA		
					M (Sliding bearing)					M (Sliding bearing)				≤25	50~100	100~200
					≤25	25~50	50~100	100~150	150~200	≤50	100~150	150~200				
Ø80	17.5	11	M12X1.75 DP24	56.4	23.5	25.5	53.5	58.5	78.5	8.5	72.5	87.5	100	42	54	92
Ø100	20	11	M14X2.0 DP28	66	19	24	49	54	74	4	73	88	124	35	47	85