TAP CHUCK



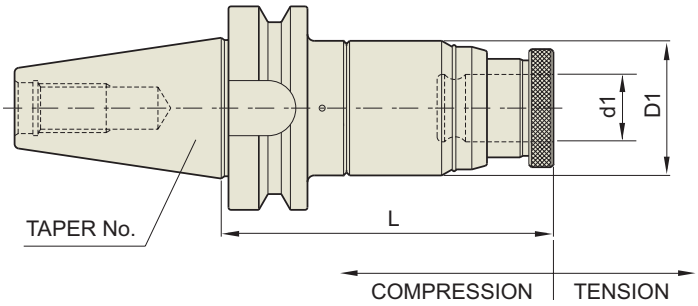

MAS	Taper Accuracy	G Value	RPM	Coolant System
- BT 403	AT3			

TAPER No.	CODE No.	TAP SIZE	LENGTH COMPENSATION		d1	D1	L	TAP ADAPTER CODE	중량(KG)	재고
			COMP.	TEN.						
30	**BT30-TC12-100**	M3~M12	5	15	19	45	100	TCS12	1.0	●
40	**BT40-TC12- 90**	M3~M12	5	15	19	45	90	TCS12	1.5	●
	BT40-TC12-130	M3~M12	5	15	19	45	130	TCS12	1.6	
	BT40-TC24-100	M6~M24	5	20	31	63	100	TCS24	2.1	●
	BT40-TC24-142	M6~M24	5	20	31	63	142	TCS24	2.9	
50	**BT50-TC12-130**	M3~M12	5	15	19	45	130	TCS12	4.2	●
	BT50-TC12-175	M3~M12	5	15	19	45	175	TCS12	4.8	●
	BT50-TC12-220	M3~M12	5	15	19	45	220	TCS12	5.1	
	BT50-TC24-142	M6~M24	5	20	31	63	142	TCS24	5.8	●
	BT50-TC24-187	M6~M24	5	20	31	63	187	TCS24	6.0	●
	BT50-TC38-175	M18~M38	10	25	48	98	175	TCS38	8.3	●

TAP CHUCK - STRAIGHT SHANK

TC



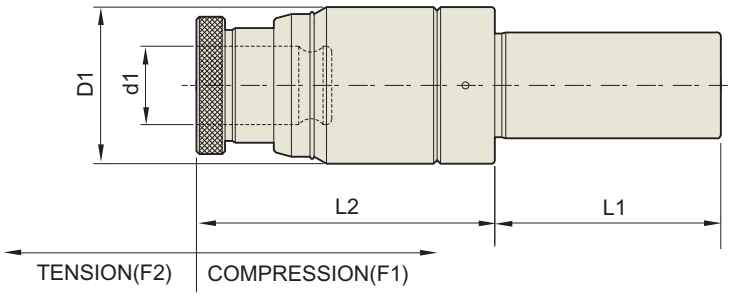

K	Taper Accuracy	G Value	RPM	Coolant System
	AT3			

TAPER No.	CODE No.	TAP SIZE	LENGTH COMPENSATION		d1	D1	L1	L2	TAP ADAPTER CODE	중량(KG)	재고
			COMP.	TEN.							
32	K32-TC12-100	M3-M12	15	5	32	45	60	100	TCS12	0.90	●
	K32-TC24-120	M6-M24	20	5	32	63	60	120	TCS24	1.40	●
42	K42-TC12-100	M3-M12	15	5	42	45	70	100	TCS12	1.10	
	K42-TC24-120	M6-M24	20	5	42	63	70	120	TCS24	1.60	

TAP CHUCK

HSK



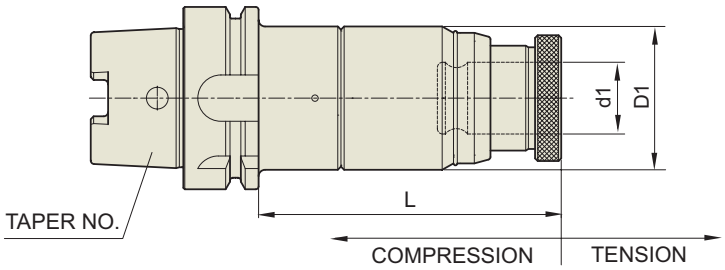

DIN69893 - HSK	Taper Accuracy	G Value	RPM	Coolant System
	AT3			

TAPER No.	CODE No.	TAP SIZE	LENGTH COMPENSATION		d1	D1	L	TAP ADAPTER CODE	중량 (KG)	재고
			COMP.	TEN.						
63A	HSK63A-TC12-120	M3 ~ M12	5	15	19	45	120	TCS12	1.00	
	HSK63A-TC12-150	M3 ~ M12	5	15	19	45	150	TCS12	1.70	
	HSK63A-TC24-142	M6 ~ M24	5	20	31	63	142	TCS24	2.40	
	HSK63A-TC24-172	M6 ~ M24	5	20	31	63	172	TCS24	2.70	
100A	HSK100A-TC12-130	M3 ~ M12	5	15	19	45	130	TCS12	4.30	
	HSK100A-TC12-175	M3 ~ M12	5	15	19	45	175	TCS12	4.80	
	HSK100A-TC12-220	M3 ~ M12	5	15	19	45	220	TCS12	5.30	
	HSK100A-TC24-142	M6 ~ M24	5	20	31	63	142	TCS24	5.20	
	HSK100A-TC24-187	M6 ~ M24	5	20	31	63	187	TCS24	6.60	
	HSK100A-TC38-200	M18 ~ M38	10	25	48	98	200	TCS38	8.00	

TAP CHUCK TC

SK



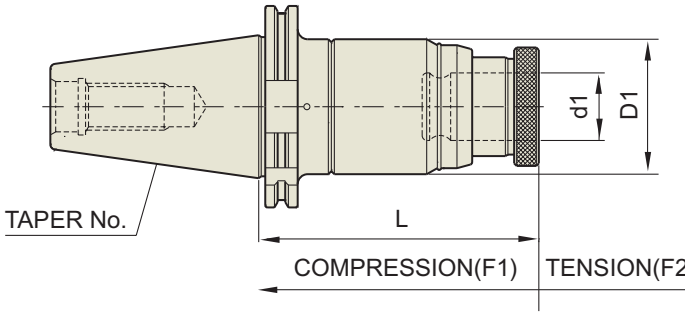

DIN69871 - SK | Taper Accuracy: AT3 | G Value | RPM | Coolant System

■ STANDARD

TAPER No.	CODE No.	TAP SIZE	d1	D1	L	F1	F2	중량(KG)	재고
40	SK40-TC12-90	M3-M12	19	45	90	5	15	1.30	
	SK40-TC12-130	M3-M12	19	45	130	5	15	1.80	
	SK40-TC24-120	M6-M24	31	63	120	5	20	2.50	
	SK40-TC24-142	M6-M24	31	63	142	5	20	2.80	
50	SK50-TC12-130	M3-M12	19	45	130	5	15	4.30	
	SK50-TC12-175	M3-M12	19	45	175	5	15	5.50	
	SK50-TC24-142	M6-M24	31	63	142	5	20	5.30	
	SK50-TC24-187	M6-M24	31	63	187	5	20	7.80	
	SK50-TC38-175	M18-M38	48	98	175	10	25	7.50	

TAP CHUCK TC

MTA



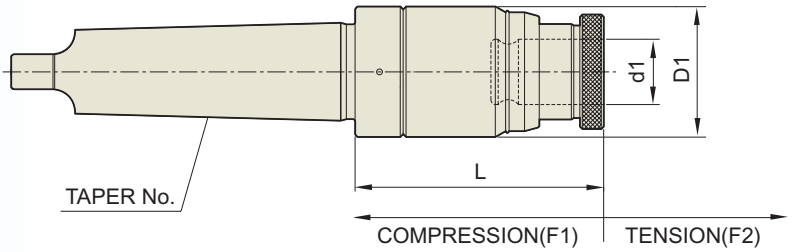

DIN228 - MTA | Taper Accuracy: AT3 | G Value | RPM | Coolant System

TAPER No.	CODE No.	TAP SIZE	LENGTH COMPENSATION		d1	D1	L	TAP ADAPTER CODE	중량(KG)	재고
			COMP.	TEN.						
3	MTA3-TC12- 90	M3-M12	5	15	19	45	90	TCS12	1.00	
	MTA3-TC24-115	M6-M24	5	20	31	63	115	TCS24	2.00	
4	MTA4-TC12-105	M3-M12	5	15	19	45	105	TCS12	1.20	
	MTA4-TC24-115	M6-M24	5	20	31	63	115	TCS24	2.20	
5	MTA5-TC12-145	M3-M12	5	15	19	45	145	TCS12	1.50	
	MTA5-TC24-175	M6-M24	5	20	31	63	175	TCS24	2.60	