HDM Drive



M-Drive Manual

User Manual

1. Installation

- For horizontal type, a reducer should be installed on the level surface. If installation on the inclined surface is required, please discuss with the sales department in advance.
- For convenient and continuous maintenance, particularly for regular lubrication maintenance, a reducer must be installed in an easily accessible location.
- The location where the reducer is installed must be designed to be able to bear the weight of the reducer and other devices as well as the stress and shocks of the operation.
- When connecting the reducer with a motor or machines, shafts (both input and output) must be placed accurately (either parallel or in a concentric formation), and the connecting belt or chain must be adequately tight.
- Do NOT apply excessive force when assembling parts that are connected to the input/output shaft – gear, pulley, sprocket, etc. To consider overhung loads, select those connecting parts that have a adequately large diameter and place them close to the main body.
- After a test operation, the reducer must be firmly fixed to the installed surface with pins and bolts.
- If the reducer is installed in a sealed location, a ventilation system must be provided.

2. Lubrication

2-1) Selection of lubrication type

In general, the lubrication type is selected on the basis of frame size and reduction ratio.

Normal lubrication type for single reduction type model

Type \ Frame	102	103	104	105	106	107	108	109	110	122	111	124	112	125
Horizontal	Grease		Oil bath											
Vertical			Oil pump or Oil bath											

Normal lubrication type for double reduction type model

Type \ Frame		232	242	252	262	272	282	243	253	263	273 274	284	293 294 296	2104 2106	2224 2226	2116 2117	2246 2247	2128 2258
Horizontal								Oil bath										
Vertical	Red. ratio: 121-493	Grease											Oil pump or Oil bath					
	Red. ratio: 595-841																	
	Red. ratio: 957-1015																	
	Red. ratio: 1225-2523																	
	Red. ratio: 2537-3045																	
	Red. ratio: 3481-7569																	

2-2) Oil-based lubrication

- Recommended lubrication oil products

Temperature (℃)	SHELL	MOBIL	CASTROL	Kukdong
0℃~35℃	OMALA OIL 220	MOBILGEAR 600XP 220	ALPHA SP220	SUPER EP220

※ If the ambient temperature is higher or lower than that given in the above range, please select a different oil product.

- Guidelines for oil injection

a. Before operation, inject oil through the oil hole until the oil reaches the red mark line of the oil level gauge.

b. If an excessive amount of oil is injected, the temperature of the reducer can increase, as stirring a massive amount of oil can create heat and cause oil leakage in the input side.

c. To release oil, open the drain plug or bottom plug of the oil level gauge.

d. Open the air vent plug when injecting oil in the base-vertical (down) type reducer, and tape and seal the plug after injection.

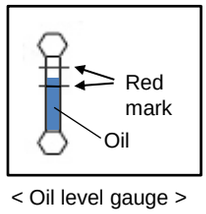

< Oil level gauge >

- Amount of oil to be injected

Single reduction type

(Unit : ℓ)

FRAME	104	105	106	107	108	109	110 122	111 124	112 125
Horizontal	0.8	0.8	1.6	1.8	2.5	4.4	7.8	15	30
Vertical	1.2	1.2	1.6	2.0	2.2	2.9	11	15	32

Double reduction type

(Unit : ℓ)

FRAME	243 253	263	273	274	284	293	294	296	2104 2224	2106 2226	2116 2246	2117 2247	2128 2258
Horizontal	0.8	1.6	2.4	2.4	3.6	6.4	6.6	6.6	11	11	18	18	30
Vertical	1.3	1.6	2.0	2.1	2.2	2.9	2.9	3.0	11	11	15	15	37

- Oil lubrication cycle

Oil change cycle		Operation condition
First lubrication	After 300 operation hours	No difference
Next lubrication cycle	6 months	10 operation hours per day
	2,500 operation hours	10~24 operation hours per day
	1~3 months	High temperature/high humidity/ other extreme conditions

a. If oil temperature is higher than 80˚C, the oil lubrication cycle should be shortened by half for every 10˚C over 80˚C (e.g., if the oil temperature is 90˚C, the lubrication cycle should be every 3 months under 10 operation hours per day)

b. To restart a reducer that has not functioned for over a month, operate the reducer for 2~3 minutes under no-load condition and change the oil.

2-3) Grease lubrication

- Recommended grease products

Temperature (℃)	SHELL	MOBIL	CASTROL	Kukdong
-10℃~50℃	ALVANIA RL GREASE 2	LUX EP 2	SPHEEROL EPL 2	KD EP GREASE 2

※ If the ambient temperature is higher or lower than the above range, select a different grease lubrication product.

- Refill/change cycle

	Operation condition	Cycle
Refill	All conditions	Not required
Change	< 10 operation hours per day	20,000 hours
	10~24 operation hours per day	4~5 years

※ To change grease, the reducer must be dissembled first. To refill, inject a small amount of grease to the grease nipple.

- Amount of grease injection required to change grease

FRAME	102	103	242	252	262	272	282	263	273 274
First reduction part	90	270	60	60	60	60	60	170	170
Output bearing	80	120	330	330	330	550	660	330	550
Second reduction part	-	-	490	490	800	1,000	1,100	800	1,000

FRAME	284	293	294	2104 2224	2106 2226	2116 2246	2117 2247	2128 2258
First reduction part	490	170	490	490	800	800	1,100	1,200
Output bearing	650	750	750	950	950	1,100	1,100	1,100
Second reduction part	1,200	1,600	1,600	2,700	2,700	5,000	5,000	8,500

- Grease maintenance guidelines:

  a. Grease type does not require frequent refills or changes.

  b. Consider refilling when there is an abnormal temperature increase or there is some noise. Please note that both excessive and insufficient amount of grease can increase the temperature.

  c. When a refill is needed, inject 1/3~1/2 of the change amount to the first reduction part (refer to the above table).

  d. For easy injection, inject using a grease gun through the grease nipple while the reducer is in operation.

  e. To change grease, dissemble the reducer first, wash each part, apply grease as instructed in the above table, and reassemble to finalize.

3. Daily maintenance

- Check the oil level gauge.
- Check the surface temperature of the ring gear housing. When the surface temperature is approximately 60℃ and does not fluctuate, the reducer is considered stable. When the temperature increases abnormally without any change in operational conditions, inject grease or oil immediately. If the temperature still does not stabilize, contact us or the sales agent.
- When there is an abnormal noise from inside of the reducer, stop the operation and check the reducer immediately.
- When oil or grease leaks, check the leaking parts and replace worn or damaged parts.

4. List of parts

MSH (Single reduction type)

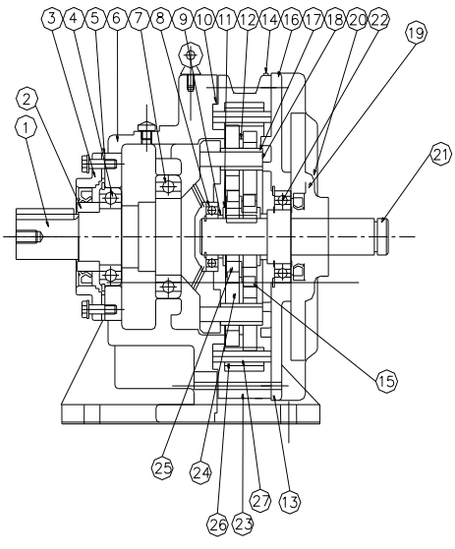

MSV (Single reduction type)

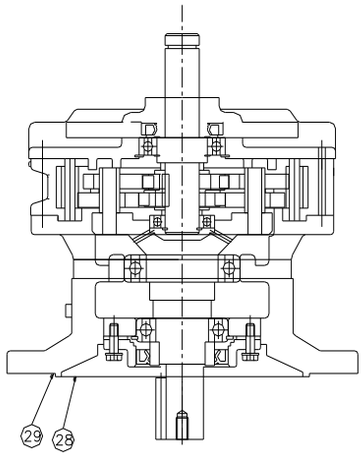

MMH (Single reduction type)

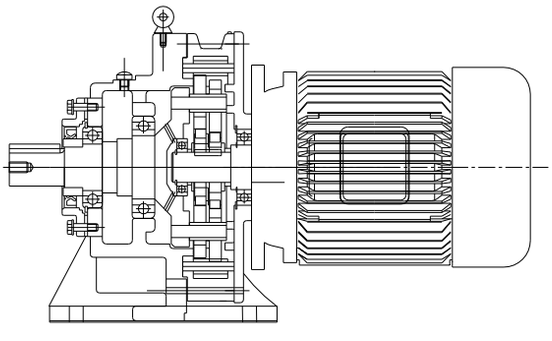

MSH (Double reduction type)

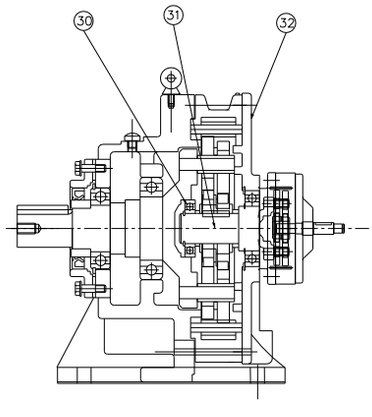

No.	Name of part	No.	Name of part	No.	Name of part	No.	Name of part
1	Slow Speed Shaft	9	Spacer	17	Slow Speed Shaft Roller	25	Eccentric
2	Collar	10	Gasket	18	Slow Speed Shaft Pin	26	Ring Gear Roller
3	Slow Speed End Cap	11	End Plate	19	Cooing Fan	27	Ring Gear Pin
4	Bearing	12	Spacer Ring	20	Fan Cover	28	Gland
5	Gasket	13	Gasket	21	High Speed Shaft	29	Base
6	Case	14	Air Vent	22	Bearing	30	Bearing
7	Bearing	15	Roller Bearing	23	Ring Gear Housing	31	Intermediate Shaft
8	Bearing	16	High Speed End Shield	24	Cycloidal Disc	32	Intermediate Cover

User Manual

MJH (Single reduction type)

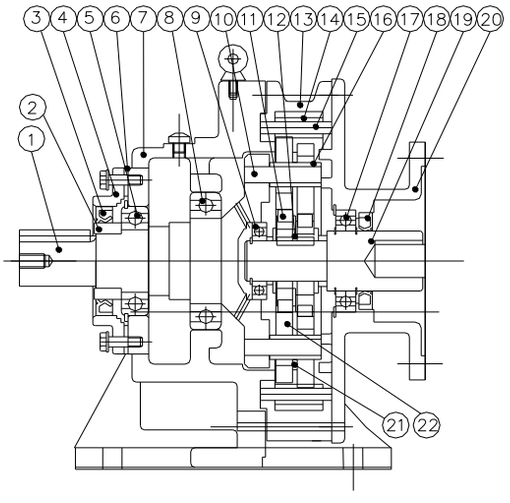

MJV (Single reduction type)

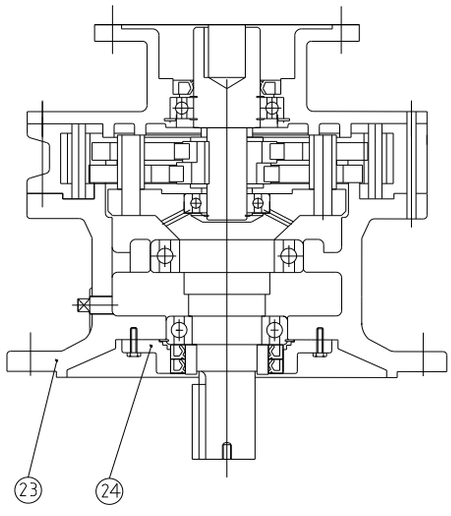

MMJH (Single reduction type)

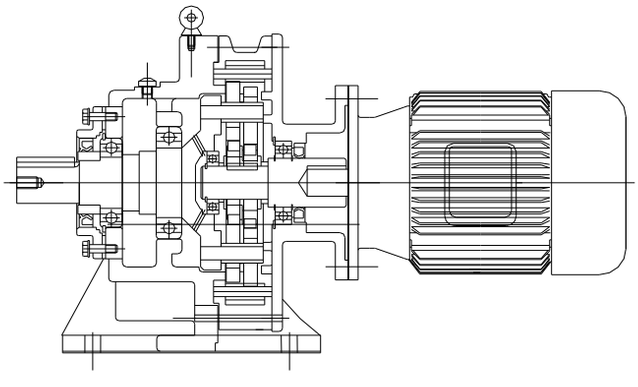

MJH (Double reduction type)

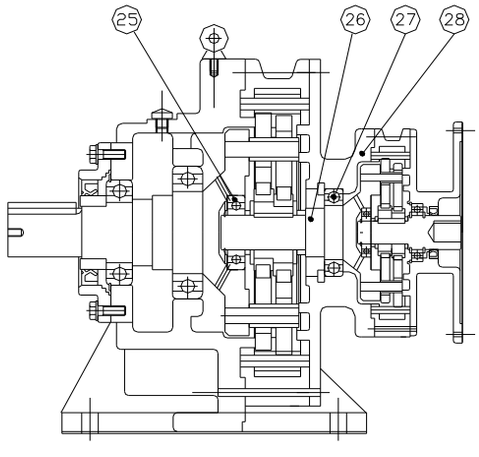

No.	Name of part	No.	Name of part	No.	Name of part	No.	Name of part
1	Slow Speed Shaft	8	Ball Bearing	15	Ring Gear Pin	22	Cycloidal Disc
2	Collar	9	Roller Bearing	16	Slow Speed Shaft Roller	23	Base
3	Oil Seal	10	Slow Speed Shaft Pin	17	Oil Seal	24	Gland
4	Slow Speed End Cap	11	Roller Bearing	18	Ball Bearing	25	Roller Bearing
5	Ball Bearing	12	Eccentric	19	Hollow Input Shaft	26	Intermediate Shaft
6	Gasket	13	Ring Gear Housing	20	Adapter	27	Ball Bearing
7	Case	14	Ring Gear Roller	21	Spacer Ring	28	Intermediate Cover

5. Disassembling and assembling

5-1) Disassembling

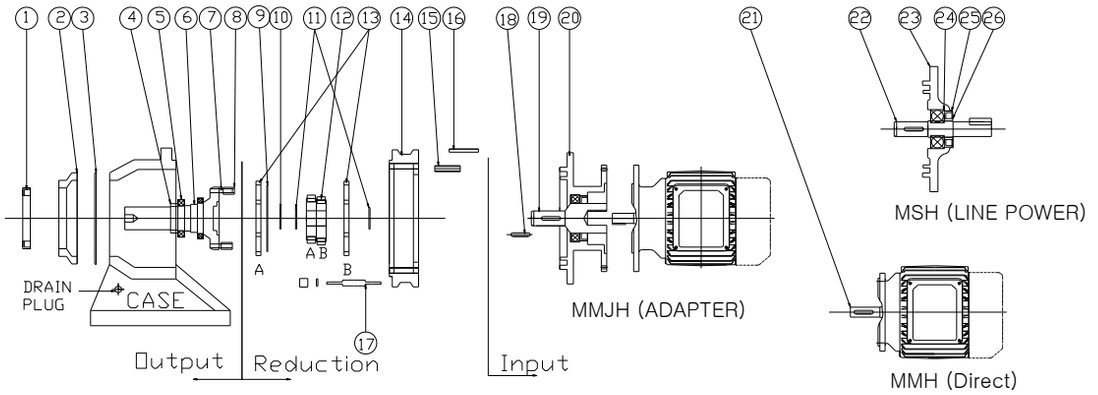

- **Detaching output part**

  For oil lubrication type, release the oil drain plug and drain oil fully before disassembling. Place output shaft in the “up” direction, release the housing bolts(**20**), insert the eye bolt in the output shaft, and lift output part to detach it from the rest of the reducer.

- **Disassembling output part**

2 SLOW SPEED END CAP → **1** OIL SEAL → **3** GASKET → **6** SLOW SPEED SHAFT → **5** BEARING → **4** COLLAR

- **Disassembling reduction + input part (per type)**

Adapter type (J or MJ type)

8 SLOW SPEED SHAFT ROLLER → **13** CYCLOIDAL DISC A → **9** SPACER RING → **10** RETAINING RING → **11** END PLATE → **12** ECCENTRIC ROLLER BEARING → **24** CYCLOIDAL DISC B → **17** KEY → **11** END PLATE → **14** RING GEAR HOUSING → **16** RING GEAR PIN → **15** RING GEAR ROLLER → **19** MJ FLANGE → **18** MJ SHAFT → **20** MOTOR

Direct connecting type (M type)

8 SLOW SPEED SHAFT ROLLER → **13** CYCLOIDAL DISC A → **9** SPACER RING → **10** RETAINING RING → **11** END PLATE → **12** ECCENTRIC ROLLER BEARING → **24** CYCLOIDAL DISC B → **17** KEY → **11** END PLATE → **14** RING GEAR HOUSING → **16** RING GEAR PIN → **15** RING GEAR ROLLER → **20** MOTOR

Line Power type (S type)

8 SLOW SPEED SHAFT ROLLER → 13 CYCLOIDAL DISC A → 9 SPACER RING → 10 RETAINING RING → 11 END PLATE → 12 ECCENTRIC ROLLER BEARING → 24 CYCLOIDAL DISC B → 17 KEY → 11 END PLATE → 14 RING GEAR HOUSING → 16 RING GEAR PIN → 15 RING GEAR ROLLER → 23 HIGH SPEED END SHIELD → 22 HIGH SPEED SHAFT → 24 BEARING → 25 OIL SEAL → 26 COLLAR

5-2) Reassembling

Reassembling the M-Drive commences in reverse order of disassembling.

• When assembling, place the cycloidal discs (both A and B) with the stamped side facing the same direction, but the stamps must be 180˚ opposite to each other.

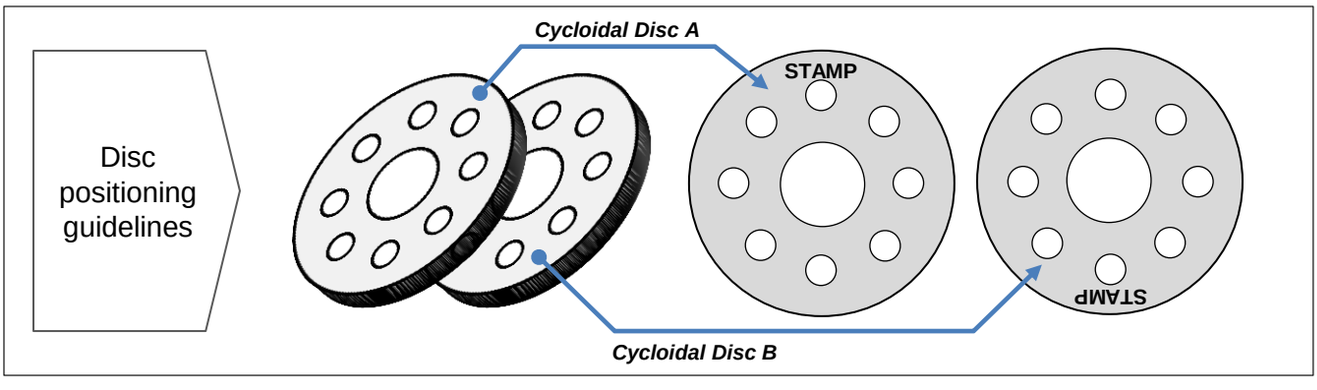

• If the oil seal, collar, or gasket is damaged or worn, replace to prevent oil leakage. Moreover, the plug and pipe-connecting bolt should be tightly sealed with sealing tape.

6. Standardized parts (replaceable)

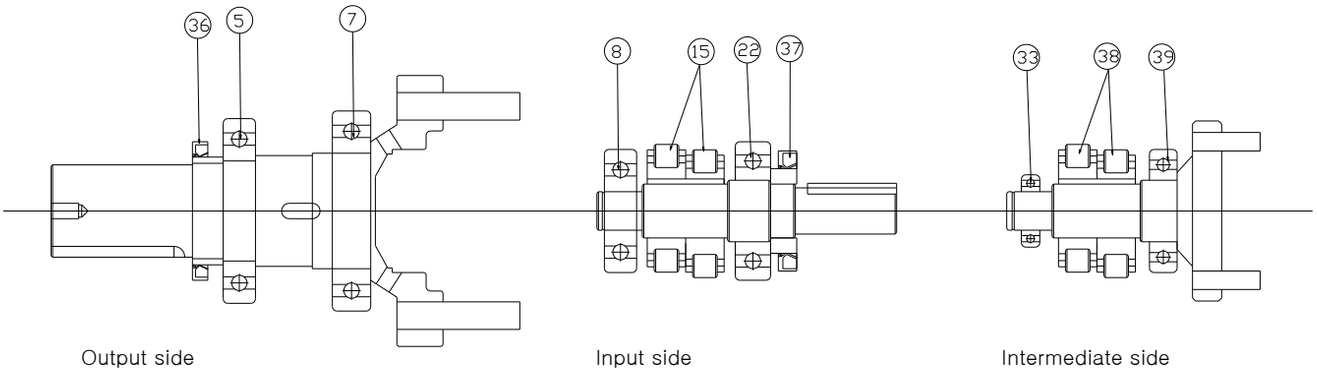

Bearing and oil seal (Single reduction type)

FRAME NO.	BEARING						OIL SEAL						
	Output side		Input side				Output side				Input side		
	5	7	8	15		22	36				37		
	BRG NO.	BRG NO.	BRG NO.	BRG NO.	Qty.	BRG NO. LP TYPE	TYPE	Spec	Qty. H TYPE	Qty. V TYPE	TYPE	Spec	Qty.
102	6206	6206	6301	own production	2	6302	D	45/62*9	1	1	S	20/35*8	1
103	6208	6208	6303	own production	2	6305	D	58/80*12	1	1	D	32/52*10	1
104	6211NR	6213	6403	own production	2	6306	D	65/90*12	1	2	D	38/58*10	1
105	6211NR	6213	6403	own production	2	6306	D	65/90*12	1	2	D	38/58*10	1
106	6213NR	6215	NJ405M	own production	2	6308	D	85/110*13	1	2	D	55/78*12	1
107	6216NR	6218	NJ406M	own production	2	6407	D	95/130*13	1	2	D	60/82*12	1
108	6218NR	6220	NJ407M	own production	2	6409	D	110/140*14	1	2	D	65/90*12	1
109	6221NR	6026	NJ408M	RN219M	2	6411	D	120/150*14	1	2	S	70/95*13	1
110	23122NR	6222	NJ409M	RN222M	2	6412	D	140/170*14	1	2	S	85/110*13	1
122	23024NR	NUP226M	NJ409M	RN222M	2	6412	D	140/170*14	1	2	S	85/110*13	1
111	23124NR	NJ224M	NJ410M	RN228M	2	6415	D	145/175*16	1	2	S	95/130*13	1
124	23028NR	NUP230M	NJ411M	RN228M	2	6415	D	170/200*15	1	2	S	95/130*13	1
112	23128NR	NJ232M	NJ414M	RN328M	2	22218	D	180/210*16	1	2	S	110/140*14	1
125	23032NR	NUP234M	NJ414M	RN328M	2	22218	D	180/210*16	1	2	S	110/140*14	1

*S: OIL SEAL LIP TYPE

**D: OIL SEAL LIP AND DUST PROOF TYPE

Bearing (Intermediate part for double reduction type)

FRAME	BEARING			
	33	38		39
	BRG NO.	BRG NO.	Qty.	BRG NO.
#232	6303	Produced by HDM	2	6206
#242	6403	Produced by HDM	2	6206
#243	6403	Produced by HDM	2	6208
#252	6403	Produced by HDM	2	6206
#253	6403	Produced by HDM	2	6208
#262	NJ405M	Produced by HDM	2	6206
#263	NJ405M	Produced by HDM	2	6208
#272	NJ406M	Produced by HDM	2	6208
#273	NJ406M	Produced by HDM	2	6208
#274	NJ406M	Produced by HDM	2	6213
#282	NJ407M	Produced by HDM	2	6208
#284	NJ407M	Produced by HDM	2	6213
#293	NJ408M	RN219M	2	6210

FRAME	BEARING			
	33	38		39
	BRG NO.	BRG NO.	Qty.	BRG NO.
#294	NJ408	RN219M	2	6213
#296	NJ408	RN219M	2	6215
#2104	NJ409	RN222M	2	6213
#2106	NJ409	RN222M	2	6215
#2224	NJ409	RN222M	2	6213
#2226	NJ409	RN222M	2	6215
#2116	NJ410	RN228M	2	6215
#2117	NJ410	RN228M	2	6218
#2246	NJ411	RN228M	2	6215
#2247	NJ411	RN228M	2	6218
#2128	NJ414	RN328M	2	6220
#2258	NJ414	RN328M	2	6220

Gasket

FRAME	Model #	Name	Applicable model for M-Drive	Thickness (mm)	Qty.
102 103	10	GASKET B	All models	0.5	1
	13	GASKET C		0.5	1
104 106 107	5	GASKET A	All models	0.5	1
	10	GASKET B	All models	0.5	1
	13	GASKET C	All models	0.5	1
108 109 110 122	5	GASKET A	All models	0.5	1
	10	GASKET B		0.5	1
	13	GASKET C		0.5	1
111 124	5	GASKET A	All models	0.5	1
	10	GASKET B		0.5	1
	13	GASKET C		0.5	1
124 125	5	GASKET A	All models	0.5	1
	10	GASKET B		0.5	1
	13	GASKET C		0.5	1



515, 98, Mayuro 70beon-gil, Siheung-si, Gyeonggi-do Korea
Tel : +82-31-319-8924~7 Fax : +82-31-319-8928 http://hdmdrive.com