H.I.D Lighting Fixtures
SR Series

Wet Locations
NEMA 3, 3R, 4, 4X, 7

❖ Type of Explosion-proof
Non Sparking (Ex nR II T3)

❖ Application

SR Series lighting fixtures are used ;

- in heavy process industries having environments where flammable or explosive vapors or gases, or where combustible dusts are present.
- in hazardous areas, both indoors and outdoors where long life and low maintenance costs are desired.
- in petroleum refineries, chemical, petrochemical and other heavy process industry facilities.
- where ignitable concentrations of flammable gases, vapors or liquids can exist all of the time or some of the time under normal operation conditions.



< SR >

❖ Features

- The globe frame is cast in one piece with guard.
- The globe is sealed into the globe frame firmly with synthetic rubber gaskets, and the globe assembly is fitted to the body by three socket head captive screws.
- All joint of lamp housing, including the joint between the top body and the terminal plate, are sealed up with high quality gaskets so as to restrict breathing.
- The body and ballast are constructed separately so as to protect the ballast from the heat of the lamp.

❖ Certification

- Certified by KOSHA (Korea Occupational Safety & Health Agency), KGS (Korea Gas Safety Corporation), and the others.

❖ Compliance

- NEMA 3 ,3R, 4, 4X, 7
- IEC 60079-0, 15
- IP55

❖ Options

- With Choke or Lead Peak type Ballast

❖ Standard Materials

- Enclosure : Aluminium sheet
- Globe : Heat resistant hard glass
- Globe Frame : Die casting aluminium alloy
- Mounting Box : Cast aluminium alloy
- External Hardware : Stainless steel

❖ Standard Finish

- MUNSELL No. 7.5BG 6/1.5
- If you want another color, contact us please.

❖ Technical Data

Electrical Rating	
Rated Voltage	AC110V/ 220V/ 240V (※ See Below)
Rated Wattage	100W/ 150W/ 175W/ 200W/ 250W/ 400W
Entry Size	1/2", 3/4", 1"

❖ Weight

Enclosure Type	Catalog No.	Weight
Small (Ceiling)	SRHL 2105	10.3 Kg
Middle (Ceiling)	SRHL 2255	19.6 Kg

⇨ If you need more information, contact us please.

Copyright by NAMBUK Electric Co., LTD. 2004

❖ Ordering Number

Lamp	Watt	Hub Size	Pendant	Ceiling	90° Bracket	40° Bracket	Certification
High Pressure Sodium	100	1/2"	SRNL1105	SRNL2105	SRNL3105	SRNL4105	Ex nR II T3
		3/4"	SRNL1103	SRNL2103	SRNL3103	SRNL4103	
	150	1/2"	SRNL1155	SRNL2155	SRNL3155	SRNL4155	
		3/4"	SRNL1153	SRNL2153	SRNL3153	SRNL4153	
	200	1/2"	SRNL1205	SRNL2205	SRNL3205	SRNL4205	
		3/4"	SRNL1203	SRNL2203	SRNL3203	SRNL4203	
	250	1/2"	SRNL1255	SRNL2255	SRNL3255	SRNL4255	
		3/4"	SRNL1253	SRNL2253	SRNL3253	SRNL4253	
	400	1/2"	SRNL1405	SRNL2405	SRNL3405	SRNL4405	
		3/4"	SRNL1403	SRNL2403	SRNL3403	SRNL4403	
Metal Halide	100	1/2"	SRHL1105	SRHL2105	SRHL3105	SRHL4105	
		3/4"	SRHL1103	SRHL2103	SRHL3103	SRHL4103	
	175	1/2"	SRHL1175	SRHL2175	SRHL3175	SRHL4175	
		3/4"	SRHL1173	SRHL2173	SRHL3173	SRHL4173	
	250	1/2"	SRHL1255	SRHL2255	SRHL3255	SRHL4255	
		3/4"	SRHL1253	SRHL2253	SRHL3253	SRHL4253	
	400	1/2"	SRHL1405	SRHL2405	SRHL3405	SRHL4405	
		3/4"	SRHL1403	SRHL2403	SRHL3403	SRHL4403	
Mercury Vapor	100	1/2"	SRML1105	SRML2105	SRML3105	SRML4105	
		3/4"	SRML1103	SRML2103	SRML3103	SRML4103	
	200	1/2"	SRML1205	SRML2205	SRML3205	SRML4205	
		3/4"	SRML1203	SRML2203	SRML3203	SRML4203	
	250	1/2"	SRML1255	SRML2255	SRML3255	SRML4255	
		3/4"	SRML1253	SRML2253	SRML3253	SRML4253	
	400	1/2"	SRML1405	SRML2405	SRML3405	SRML4405	
		3/4"	SRML1403	SRML2403	SRML3403	SRML4403	

* For Pole type, see pole section (2L-51)

❖ Ordering Information

SR NL 1 10 5
① ② ③ ④ ⑤

① SR Lighting Fixture

② Lamp Type
- NL - High Pressure Sodium
- HL - Metal Halide
- ML - Mercury Vapour

③ Mounting Type
- 1 - Pendant
- 2 - Ceiling
- 3 - 90° Bracket
- 4 - 40° Bracket

④ Lamp Wattage (W)
- 10 - 100
- 15 - 150
- 17 - 175
- 20 - 200
- 25 - 250
- 40 - 400

⑤ Entry Size
- 1 - 1"
- 3 - 3/4"
- 5 - 1/2"

Copyright by NAMBUK Electric Co., LTD. 2004

❖ Photometric Data

<SRNL 2255>

+Lamp : NH250 (25000 lm)
+With Globe and Guard

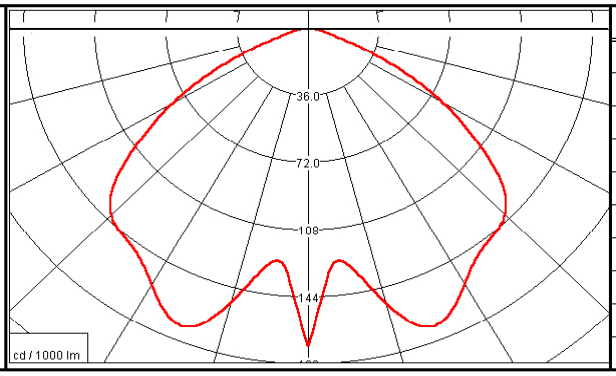

Angle	cd/1000 lm	Angle	cd/1000 lm
0	170	50	130
5	118	55	102
10	128	60	80.0
15	152	65	50.0
20	175	70	25.0
25	170	75	12.5
30	158	80	7.5
35	148	85	5.0
40	145	90	2.5
45	142		

Multipliers

(For use with candlepower curves only)

Lamp Watts	Conversion Factor
250	1
200	0.8
150	0.6
100	0.4

Coefficients of Utilization - Zonal Cavity

%Effective Ceiling Cavity Reflectance(ρcc)	80			70			50			30			10			0
%Wall Reflectance(ρ_w)	50	30	10	50	30	10	50	30	10	50	30	10	50	30	10	0
Room Cavity Ratio RCR	20% Effective Floor Cavity Reflectance															
0	.59	.59	.59	.58	.58	.58	.55	.55	.55	.53	.53	.53	.51	.51	.51	.50
1	.53	.52	.50	.52	.51	.49	.50	.49	.48	.48	.47	.46	.46	.46	.45	.44
2	.48	.46	.43	.47	.45	.43	.46	.44	.42	.44	.42	.41	.43	.41	.40	.39
3	.44	.41	.38	.43	.40	.38	.42	.39	.37	.40	.38	.36	.39	.37	.36	.35
4	.40	.36	.34	.39	.36	.34	.38	.35	.33	.37	.35	.33	.36	.34	.32	.31
5	.37	.33	.30	.36	.33	.30	.35	.32	.30	.34	.32	.29	.33	.31	.29	.28
6	.34	.30	.27	.33	.30	.27	.32	.29	.27	.32	.29	.27	.31	.28	.27	.26
7	.31	.27	.25	.31	.27	.25	.30	.27	.25	.29	.26	.24	.29	.26	.24	.23
8	.29	.25	.23	.28	.25	.23	.28	.25	.22	.27	.24	.22	.27	.24	.22	.21
9	.27	.23	.21	.26	.23	.21	.26	.23	.21	.25	.23	.21	.25	.22	.21	.20
10	.25	.22	.19	.25	.21	.19	.24	.21	.19	.24	.21	.19	.23	.21	.19	.18

<SRHL2255>

+Lamp : MH250 (20500 lm)
+With Globe and Guard

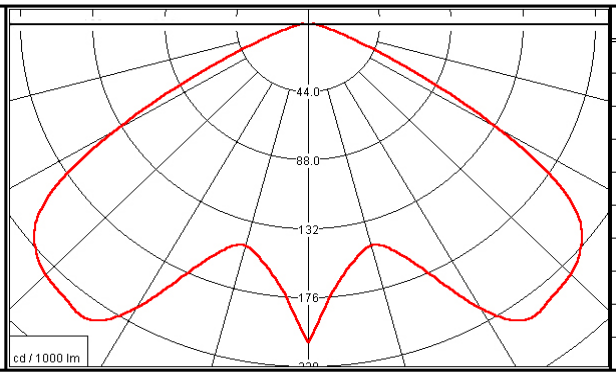

Angle	cd/1000 lm	Angle	cd/1000 lm
0	203	50	220
5	168	55	204
10	156	60	137
15	143	65	57.9
20	152	70	27.4
25	174	75	12.2
30	213	80	6.1
35	238	85	3.0
40	229	90	3.0
45	229		

Multipliers

(For use with candlepower curves only)

Lamp Watts	Conversion Factor
250	1
175	0.68

Coefficients of Utilization - Zonal Cavity

%Effective Ceiling Cavity Reflectance(ρcc)	80			70			50			30			10			0
%Wall Reflectance(ρ_w)	50	30	10	50	30	10	50	30	10	50	30	10	50	30	10	0
Room Cavity Ratio RCR	20% Effective Floor Cavity Reflectance															
0	.86	.86	.86	.84	.84	.84	.80	.80	.80	.77	.77	.77	.74	.74	.74	.72
1	.77	.75	.72	.76	.73	.71	.73	.71	.69	.70	.68	.67	.67	.66	.65	.64
2	.70	.66	.63	.69	.65	.62	.66	.63	.61	.64	.61	.59	.62	.60	.58	.57
3	.63	.58	.55	.62	.58	.54	.60	.56	.53	.58	.55	.52	.56	.54	.51	.50
4	.57	.52	.48	.56	.51	.48	.55	.50	.47	.53	.49	.46	.52	.48	.46	.45
5	.52	.46	.42	.51	.46	.42	.50	.45	.42	.48	.45	.41	.47	.44	.41	.40
6	.47	.42	.38	.47	.41	.38	.46	.41	.37	.44	.40	.37	.43	.40	.37	.35
7	.43	.38	.34	.43	.38	.34	.42	.37	.34	.41	.37	.33	.40	.36	.33	.32
8	.40	.34	.31	.39	.34	.31	.38	.34	.30	.38	.33	.30	.37	.33	.30	.29
9	.37	.31	.28	.36	.31	.28	.36	.31	.28	.35	.31	.27	.34	.30	.27	.26
10	.34	.29	.25	.34	.29	.25	.33	.28	.25	.32	.28	.25	.32	.28	.25	.24

Copyright by NAMBUK Electric Co., LTD. 2004

❖ Dimension

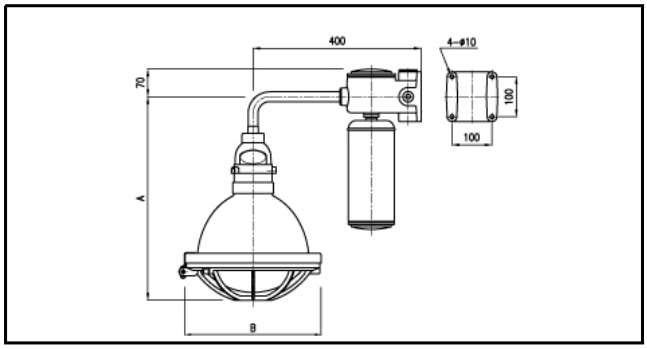

< SR 90° Bracket Type >

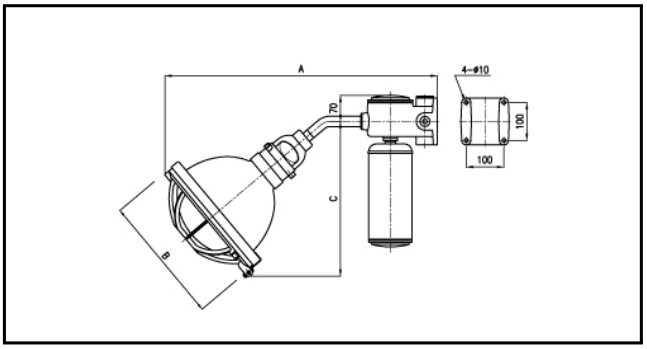

< SR 40° Bracket Type >

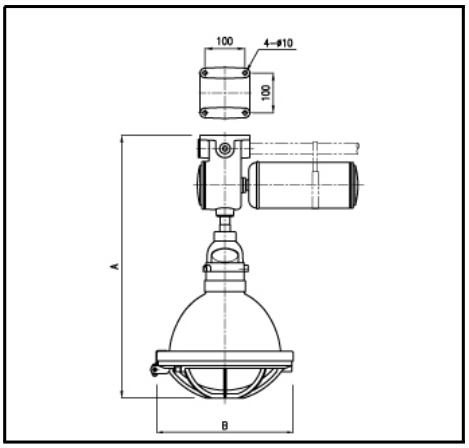

< SR Ceiling Type >

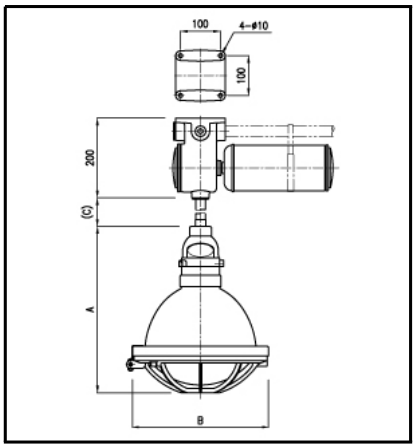

< SR Pendant Type >

LAMP WATT	Ceiling Type		Pendant Type		90° Bracket		40° Bracket		
	A	BØ	A	BØ	A	BØ	A	BØ	C
Max. 100W	550	275	310	275	420	275	650	275	345
Max. 250W	640	340	400	340	510	340	710	340	400
Max. 400W	695	385	455	385	565	385	750	385	430

Copyright by NAMBUK Electric Co., LTD. 2004