KGN-TYPE

DIMENSIONS

KGN SERIES



F TYPE

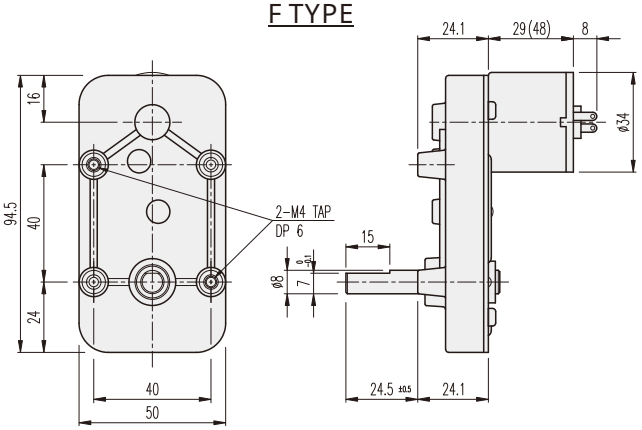

R TYPE

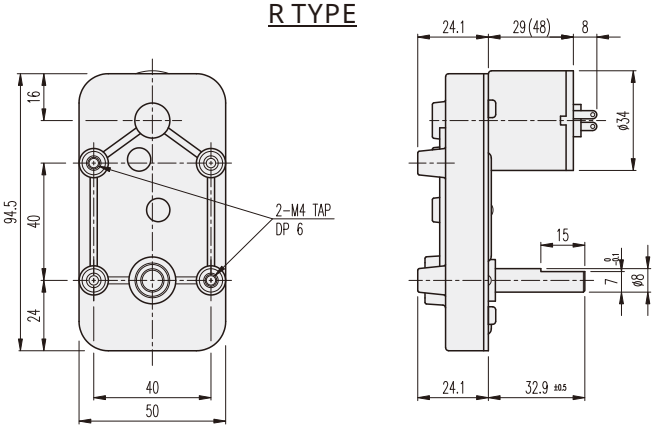

AT MAXIMUM EFFICIENCY (KGN-□□□□-KD3429□□)

MODEL / GEAR	KD3429S1		KD3429S2		KD3429T1		KD3429T2		KD3429P1		KD3429P2	
	DC 12V		DC 24V		DC 12V		DC 24V		DC 12V		DC 24V	
	rpm	kgf·cm	rpm	kgf·cm	rpm	kgf·cm	rpm	kgf·cm	rpm	kgf·cm	rpm	kgf·cm
1/0043	104.7	1.3	104.7	1.3	151	1.3	151	1.3	186	2.5	186	1.3
1/0050	90	1.5	90	1.5	130	1.5	130	1.5	160	2.9	160	1.5
1/0105	42.9	3	42.9	3	62	3	62	3	76.2	6	76.2	3

AT MAXIMUM EFFICIENCY (KGN-□□□□-KD3448□□)

MODEL / GEAR	KD3448S1		KD3448S2		KD3448T1		KD3448T2		KD3448P1		KD3448P2	
	DC 12V		DC 24V		DC 12V		DC 24V		DC 12V		DC 24V	
	rpm	kgf·cm	rpm	kgf·cm	rpm	kgf·cm	rpm	kgf·cm	rpm	kgf·cm	rpm	kgf·cm
1/0043	104.7	2.5	104.7	2.5	151	2.5	151	2.5	186	2.5	186	2.5
1/0050	90	2.9	90	2.9	130	2.9	130	2.9	160	2.9	160	2.9
1/0105	42.9	6	42.9	6	62	6	62	6	76.2	6	76.2	6

* These ratios are opposite with motor rotation direction.