BROCHURE

Adams Car™

Real Dynamics for Vehicle Design and Testing



Adams Car

With Adams Car, engineering teams can quickly build and test functional virtual prototypes of complete vehicles and vehicle subsystems. This helps cut time, cost, and risk in vehicle development and improves the quality of the new vehicle designs. Working in the Adams Car simulation environment, automotive engineering teams can exercise their vehicle designs under various road conditions, performing the same tests they normally run in a test lab or on a test track, but in a fraction of the time.

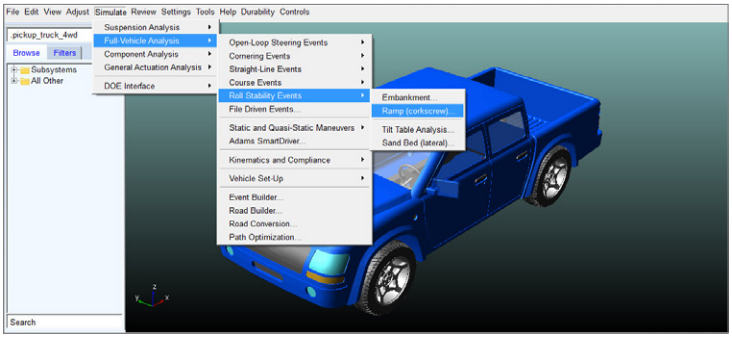

Business Value

- **Improve Engineering Productivity:** Enable efficient communication between various groups of expertise, reduce your dependency on disconnected point solutions, and improve analyst efficiency.
- **Accelerate Time-To-Market:** Gain faster, better insight into overall system design performance.
- **Reduce Manufacturing Costs:** Accurately predict and correct the design behavior much earlier in the design cycle. Achieve an optimal design by analyzing multiple design variations faster.
- **Achieve Lower Warranty Costs:** Predict system-level functional performance, and accurately assess lifecycle service (safety, fatigue, durability). Reduce risk by having better information at every state of vehicle design and development.
- **Drive Innovation:** Explore several design concepts quickly and efficiently.

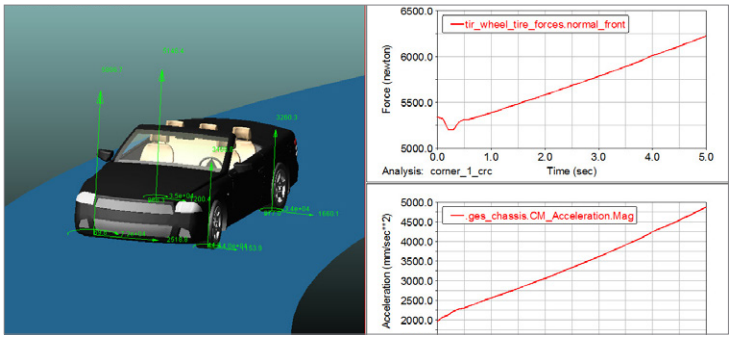

High Performance Computing (HPC)

- 64-bit support on Windows and Linux platforms
- Parallel processing support for Adams Tire results
- Shared Memory Parallel solver
- High fidelity Adams-to-Nastran translation utilities to replace manual translation
- HHT integrators for a faster numerical integration of the equations of motion for a dynamic analysis

Adams Car Studio Includes:

- Car Plug-In
- Car Suspension
- Tire Handling
- 3D Road
- Vehicle Solver

Adams Chassis Studio Includes:

- Chassis GUI
- Chassis Utilities
- SmartDriver
- Tire Handling
- 3D Road
- Vehicle Solver

Adams Car Ride Plug-in Includes:

- Car Plug-In
- Car Ride GUI
- Solver Extension

Adams Driveline Package Includes:

- Car Plug-In
- Driveline GUI
- Solver Extension

Prerequisites

- Adams Studio Package

HEXAGON | MSC Software

Adams Car Solution Modules

Available to purchase as add-on modules with Adams studio package through MSC Software.
Also available on the MSC One token system.

Adams Car Vehicle Dynamics

With Adams Car, you can perform various analyses on the vehicle to test the design of the different subsystems and see how they influence the overall vehicle dynamics. You can also examine the influence of component modifications, including changes in spring rates, damper rates, bushing rates, and anti-roll bar rates, on the vehicle dynamics. This module includes standard testing procedures for cornering, courses, steering, quasi-static, and straight-line analyses.

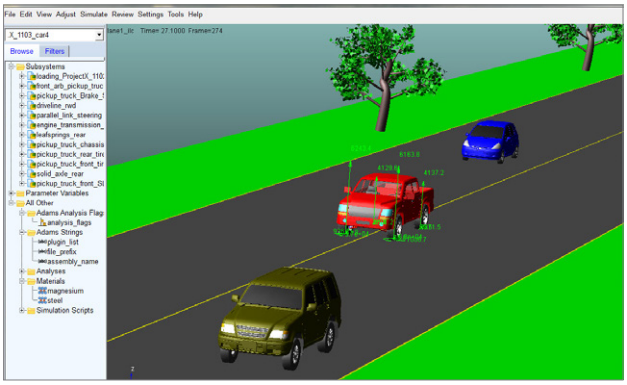

Adams Driveline

Adams Driveline provides engineers and analysts with specialized tools for modeling and simulating driveline components and studying the dynamic behavior of the entire driveline during different operating conditions.

It can also be used to explore the interaction between the driveline and chassis components, such as suspensions, steering system, brakes, and the vehicle body.

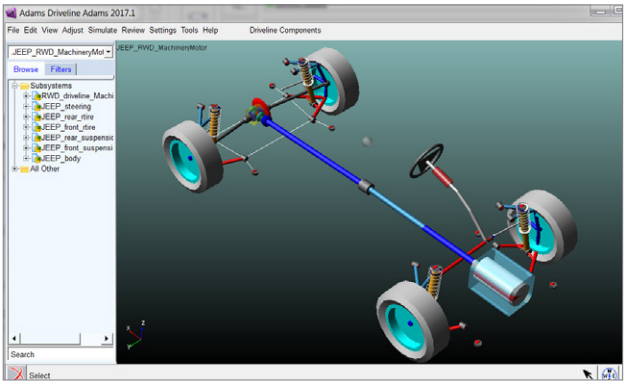

Adams Car Ride

Adams Car Ride is an extension of the Adams Car capabilities to allow virtual ride and comfort engineering up-front in the vehicle design process. Adams Car Ride includes the required elements, models, and event definitions for building, testing, and post processing within the ride frequency regime. The same model database used for handling can now be user for ride and comfort engineering.

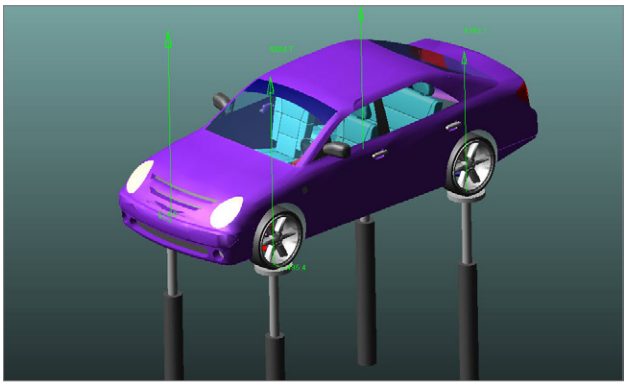

Adams Car Truck

Adams Car Truck provides component, suspension and full-vehicle templates specifically for heavy truck and bus engineers. Elements like a steerable solid-axle suspension, dual wheels and airbags are included in the database. Adams Car Truck models can be run through the complete battery of Adams Car suspension tests as well as full-vehicle maneuvers bolstered by special tuning of the Adams SmartDriver for heavy vehicles.

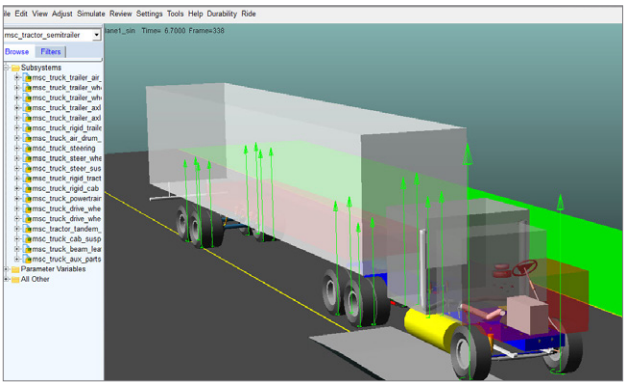

Adams SmartDriver

Typically used in race car simulation, the Adams SmartDriver is an advanced driver simulator that allows you to push your vehicle model to its performance limits or user specified targets, such as a percentage of maximum longitudinal acceleration. Using Adams SmartDriver, vehicle handling, durability, and ride performance can be improved with minimal set-up.

Adams 3D Road

Adams 3D Road lets you simulate many types of three-dimensional smooth roads such as highways, race tracks, test tracks, and parking structures. Adams 3D Road helps you study various effects of smooth roads, such as bank angle and slope, on vehicle dynamics. You can simulate particular roads including your company's own closed-circuit test track.

Adams Tire FTire

Adams Tire FTire is a high-fidelity tire model that can be used to simulate maneuvers such as braking, steering, acceleration, free-rolling, or skidding.

It lets you model the forces and torques that act on a tire as it moves over roadways or irregular terrain.

You can use Ftire to model tires for either vehicle-handling, ride and comfort, and vehicle durability analyses.

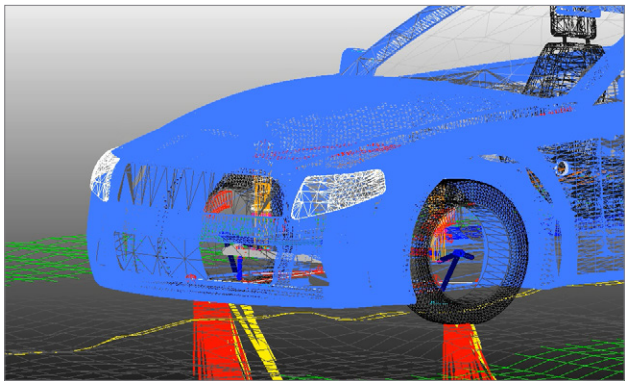

Vehicle Dynamics Events Library

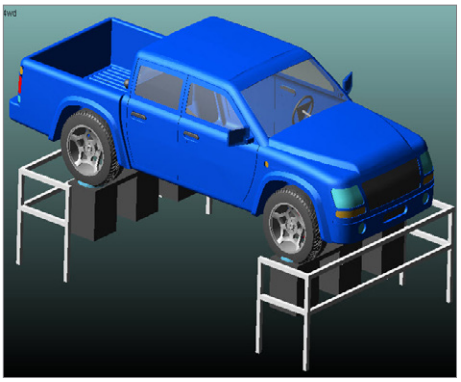

Suspension Events: realistic suspension testing to validate the vehicle kinematics and compliance

- Parallel Wheel Travel
- Opposite Wheel Travel
- Roll & Vertical Force
- Single Wheel Travel
- Steering
- Static load
- External files
- Suspension Load Cases
- Suspension Parameter Measurement Machine (SPMM)

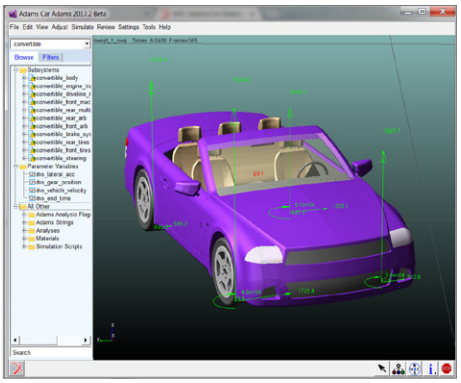

Open-loop Steering Events: a wide range of handling analyses with non-feedback controller

- Drift
- Fish Hook
- Impulse Steer
- Ramp Steer
- Single Lane Change
- Step Steer
- Swept-Sine Steer
- Grist Mill
- Hands Free
- J Turn
- On Center
- Parking Effort
- Swept Steering Event
- Double Lane Change

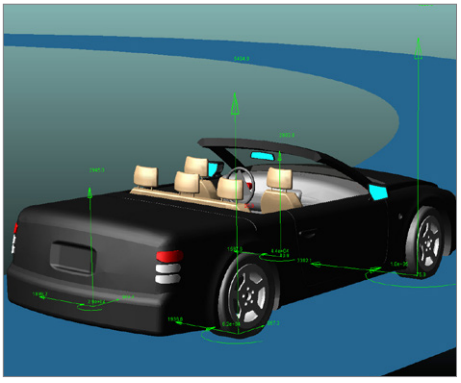

Cornering Events: investigate both steady-state and limit cornering to capture responses such as understeer/oversteer gradients

- Braking in Turn
- Constant Radius Cornering
- Cornering w/Steer Release
- Lift-Off Turn-In
- Power-Off Cornering
- Throttle on in Turn

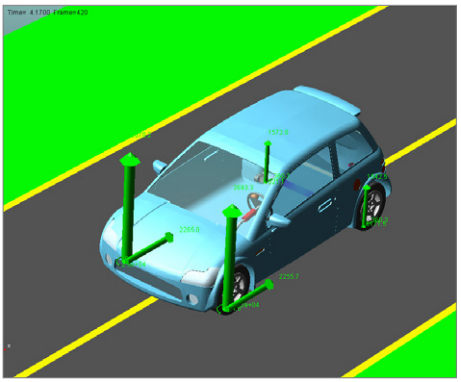

Straight-Line Events: focus on the longitudinal dynamics of the vehicle

- Acceleration
- Braking
- Braking on Split μ
- Maintain
- Power-Off Straight Line
- Brake Drift
- Cross Wind

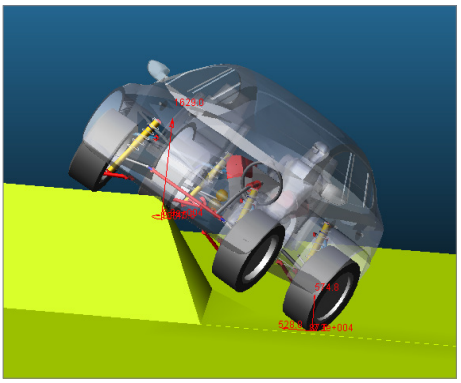

Roll-stability Events: ensure the safety and stability of the vehicle with roll-over simulations

- Sand Bed (Lateral)
- Embankment
- Corkscrew Ramp
- Tilt Table Analysis

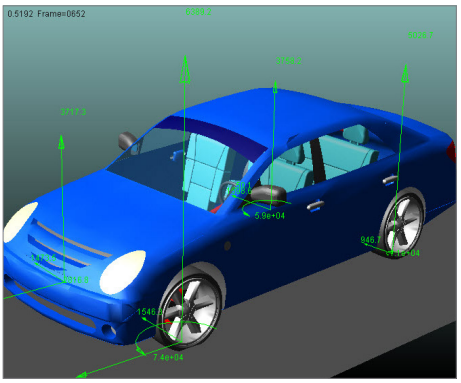

Static and Quasi-Static Analyses: find dynamic equilibrium solutions for your full vehicle during acceleration

- Constant Radius Cornering
- Constant Velocity Cornering
- Force-Moment Method
- Straight-Line Acceleration
- Static Equilibrium
- Static Vehicle Characteristics (SVC)

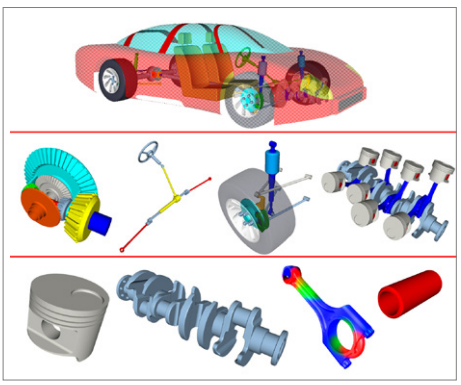

File Driven Events: run an analysis described in an existing event file

- Predefined Files in Library
- Event Builder GUI

©2019 MSC Software is part of Hexagon (Nasdaq Stockholm: HEXA B), a global leader in sensor, software and autonomous solutions. Learn more at hexagon.com and follow us @HexagonAB. The MSC Software corporate logo, MSC, and the names of the MSC Software products and services referenced herein are trademarks or registered trademarks of the MSC Software Corporation and/or its subsidiaries and affiliates in the United States and/or other countries. All other trademarks belong to their respective owners. All rights reserved.

ADMC*2019SEP*BR