DIGITAL TACHOGRAPH

MODEL DST 100/200 DIGITAL TACHOGRAPH

Dong-Suh Control Co.,Ltd.

DST 100



DST 200



DESCRIPTION

DST 100/200 DTG(Digital Tachograph) can automatically store the digital data of speed data, RPM, GPS data and the driver's activity like braking by the tachograph system and the digital data can be analyzed by computer. It allows easier and more effective control of drivers' working hours by their employers and by control authorities.

APPLICATION

- DST 100/200 is ideal for Commercial vehicles such as Bus, Truck and Taxi etc.
- DST 100 is mainly applied for the OEM.
- DST 200 is a compact and comfort size and it can be easily applied for various customer vehicles.

FEATURES

- Record of vehicle's speed, distance, time, RPM and braking signal
- Record and storage of the data of 0.01 seconds unit for 10 seconds before and after the event of an accident
- Measurement of an instantaneous acceleration by applying the sensor
- Record for 9 drivers maximum
- Interlocking function for CDMA and RF
- Zero tolerance by GPS time calibration
- Information of the vehicle movement by GPS data
- Record of driving information in a certain section(start time, stop time)
- Data storage for 6 months without the additional recording media
- Digital data for output and analysis
- DMS(Digital Tachograph Management System) program for analysis of each driver's behaviors on the computer

SPECIFICATIONS

- Operating Temperature : -20℃ to +80℃
- Storage Temperature : -35℃ to +85℃
- Rated Input Voltage : DC 10V to 24V
- Operation Voltage Range : DC 10V to 32V
- Operating Current : 200mA or less
- Isolation Resistance : 100VΩ Min.
- Dark Current : 1mA or less

www.dscontrol.co.kr

Note: As all contents in this catalogue is the typical information, it is subject to change without notice for product improvement and it could be different depending on the products.

MODEL DST 100/200 DIGITAL TACHOGRAPH

D I M E N S I O N S m m

DST 100

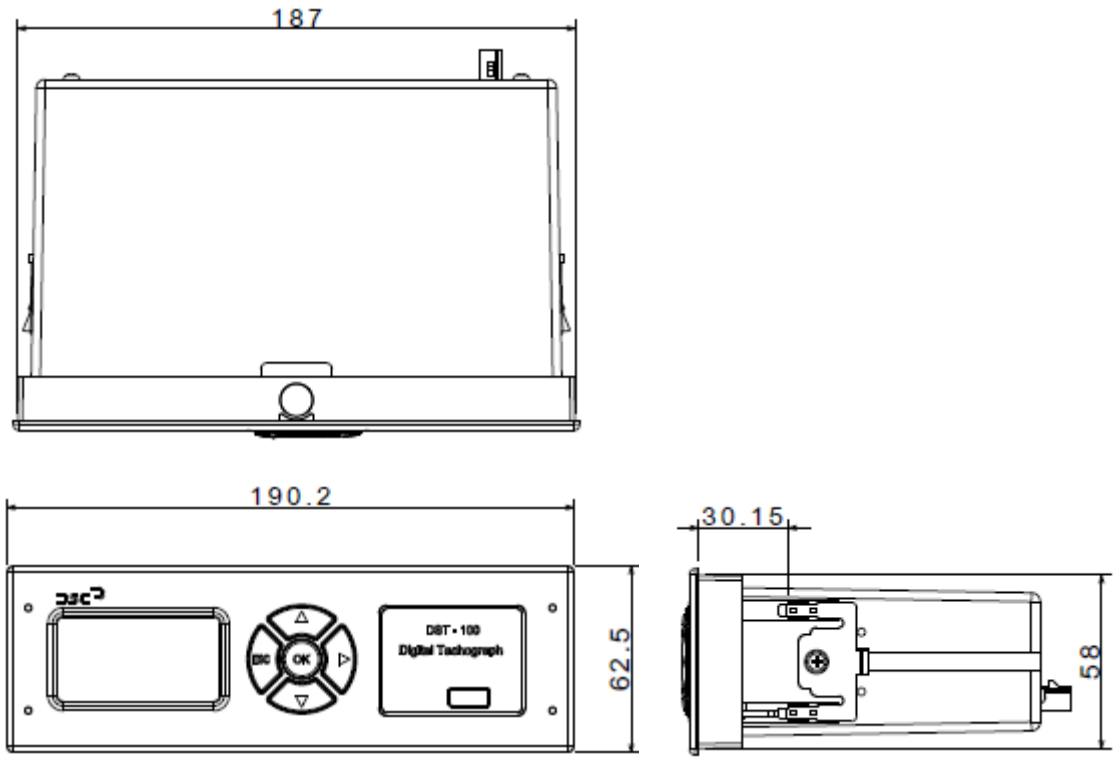

DST 200

